EPSON
EXCEED YOUR VISION

THE CRYSTAL MASTER 2022

Crystal Devices Catalogue

kHz Range Crystal unit
kHz Range SPXO / TCXO
Real Time Clock module
MHz Range Crystal unit Crystal unit with Thermistor
MHz Range SPXO / SPSO CMOS
MHz Range SPXO / SPSO Differential
TCXO
TCXO (For NW)
VCXO / VCSO
RF transmitter module
Sensor
Automotive
Appendix

PROMOTION OF ENVIRONMENTAL MANAGEMENT SYSTEM CONFORMING TO INTERNATIONAL STANDARDS

At Seiko Epson, all environmental initiatives operate under the Plan-Do-Check-Action (PDCA) cycle designed to achieve continuous improvements. The environmental management system (EMS) operates under the ISO 14001 environmental management standard.

All of our major manufacturing and non-manufacturing sites, in Japan and overseas, completed the acquisition of ISO 14001 certification.

ISO 14000 is an international standard for environmental management that was established by the International Standards Organization in 1996 against the background of growing concern regarding global warming, destruction of the ozone layer, and global deforestation.

WORKING FOR HIGH QUALITY

In order provide high quality and reliable products and services than meet customer needs, Seiko Epson made early efforts towards obtaining ISO9000 series certification and has acquired ISO9001 for all business establishments in Japan and abroad. We have also acquired IATF 16949 certification that is requested strongly by major automotive manufacturers as standard.

IATF 16949 is the international standard that added the sector-specific supplemental requirements for automotive industry based on ISO9001.

►Explanation of the mark that are using it for the catalog

Pb Free	►Pb free.
RoHS Compliant	►Complies with EU RoHS directive. *About the products without the Pb-free mark. Contains Pb in products exempted by EU RoHS directive. (Contains Pb in sealing glass, high melting temperature type solder or other.)
For Automotive	►Designed for automotive applications such as Car Multimedia, Body Electronics, Remote Keyless Entry etc.
Automotive Safety	►Designed for automotive applications related to driving safety (Engine Control Unit, Air Bag, ESC etc).

NOTICE：PLEASE READ CAREFULLY BELOW BEFORE THE USE OF THIS DOCUMENT ©Seiko Epson Corporation 2020

1. The content of this document is subject to change without notice. Before purchasing or using Epson products, please contact with sales representative of Seiko Epson Corporation (“Epson”) for the latest information and be always sure to check the latest information published on Epson’s official web sites and resources.
2. This document may not be copied, reproduced, or used for any other purposes, in whole or in part, without Epson’s prior consent.
3. Information provided in this document including, but not limited to application circuits, programs and usage, is for reference purpose only. Epson makes no guarantees against any infringements or damages to any third parties’ intellectual property rights or any other rights resulting from the information. This document does not grant you any licenses, any intellectual property rights or any other rights with respect to Epson products owned by Epson or any third parties.
4. Using Epson products, you shall be responsible for safe design in your products; that is, your hardware, software, and/or systems shall be designed enough to prevent any critical harm or damages to life, health or property, even if any malfunction or failure might be caused by Epson products. In designing your products with Epson products, please be sure to check and comply with the latest information regarding Epson products (including, but not limited to this document, specifications, data sheets, manuals, and Epson’s web site). Using technical contents such as product data, graphic and chart, and technical information, including programs, algorithms and application circuit examples under this document, you shall evaluate your products thoroughly both in stand-alone basis and within your overall systems. You shall be solely responsible for deciding whether to adopt/use Epson products with your products.
5. Epson has prepared this document carefully to be accurate and dependable, but Epson does not guarantee that the information is always accurate and complete. Epson assumes no responsibility for any damages you incurred due to any misinformation in this document.
6. No dismantling, analysis, reverse engineering, modification, alteration, adaptation, reproduction, etc., of Epson products is allowed.
7. Epson products have been designed, developed and manufactured to be used in general electronic applications and specifically designated applications (“Anticipated Purpose”). Epson products are NOT intended for any use beyond the Anticipated Purpose that requires particular quality or extremely high reliability in order to refrain from causing any malfunction or failure leading to critical harm to life and health, serious property damage, or severe impact on society, including, but not limited to listed below (“Specific Purpose”). Therefore, you are strongly advised to use Epson products only for the Anticipated Purpose. Should you desire to purchase and use Epson products for Specific Purpose, Epson makes no warranty and disclaims with respect to Epson products, whether express or implied, including without limitation any implied warranty of merchantability or fitness for any Specific Purpose. Please be sure to contact our sales representative in advance, if you desire Epson products for Specific Purpose:
   Space equipment (artificial satellites, rockets, etc.)/ Transportation vehicles and their control equipment (automobiles, aircraft, trains, ships, etc.) / Medical equipment/ Relay equipment to be placed on sea floor/ Power station control equipment / Disaster or crime prevention equipment/Traffic control equipment/ Financial equipment
   Other applications requiring similar levels of reliability as the above
8. Epson products listed in this document and our associated technologies shall not be used in any equipment or systems that laws and regulations in Japan or any other countries prohibit to manufacture, use or sell. Furthermore, Epson products and our associated technologies shall not be used for the purposes of military weapons development (e.g. mass destruction weapons), military use, or any other military applications. If exporting Epson products or our associated technologies, please be sure to comply with the Foreign Exchange and Foreign Trade Control Act in Japan, Export Administration Regulations in the U.S.A (EAR) and other export-related laws and regulations in Japan and any other countries and to follow their required procedures.
9. Epson assumes no responsibility for any damages (whether direct or indirect) caused by or in relation with your non-compliance with the terms and conditions in this document or for any damages (whether direct or indirect) incurred by any third party that you give, transfer or assign Epson products.
10. For more details or other concerns about this document, please contact our sales representative.
11. Company names and product names listed in this document are trademarks or registered trademarks of their respective companies.

CONTENTS

kHz PRODUCTS

- Crystal Unit / Crystal Oscilator / INDEX ..... 7 to 8
  - Crystal Unit ..... 9 to 14
  - SPXO / TCXO ..... 15 to 16
- Real Time Clock Module / INDEX ..... 17 to 19
  - Real Time Clock Module ..... 20 to 40

MHz PRODUCTS

- Crystal Unit / INDEX 41
  - Crystal Unit ..... 42 to 47
  - Crystal Unit with thermistor ..... 48 to 49
- SPXO / SPSO (MHz CMOS Output) / INDEX ..... 50 to 52
  - SPXO / SPSO (MHz CMOS Output) ..... 55 to 63
- SPXO / SPSO (MHz Differential Output) / INDEX ..... 53 to 54
  - SPXO / SPSO (MHz Differential Output) ..... 64 to 72
- TCXO / VC-TCXO / INDEX ..... 73 to 75
  - TCXO / VC-TCXO ..... 76 to 86
- VCXO / VCSO / INDEX 87
- VCXO / VCSO ..... 88 to 95

RF Transmitter module

- RF Transmitter module ..... 96 to 97

SENSOR

- Sensor / INDEX ..... 98 to 101
  - Gyro Sensor ..... 102 to 106

Automotive Solutions

- Automotive Solutions / INDEX ..... 107 to 109
  - Automotive Solutions ..... 110 to 133

APPENDIX

- Working For EU RoHS / Pb Free ..... 134 to 137
- Handling Precautions ..... 138 to 144
- Precautions In Designing Oscillation Circuits 145
- Packing Specifications ..... 146 to 149
- Glossary ..... 150 to 153
- Manufacuring Plant 154

kHz Products Crystal Unit

FC1610AN 9
FC2012AN 10
FC-12M 11
FC3215AN 12
FC-135R/135 13
MC-146 14

kHz Products SPXO / SPSO

CMOS
SG-3031CM 15
TG-3541CE(DTCXO)..... 16

kHz Products Real Time Clock Module

SPI or I2C bus
RX6110SA 38
SPI bus
RX4901CE 22
RX4111CE 25
RX-4803SA/LC 30
RX-4035SA/LC 32
RX-4571LC/SA 35
RX-4045SA 40
I2C bus
RX8901CE 20
RX8111CE 24
RX8804CE 26
RX8130CE 27
RX8900SA/CE 28
RX-8803SA/LC 29
RX-8035SA/LC 31
RX-8731LC 33
RX-8571SA/LC 34
RX-8564LC 36
RX8010SJ 37
RX-8025SA 39

MHz Products Crystal Unit

FA1008AN 42
FA1210AN 43
FA-118T 44
FA-128 45
FA-20H 46
TSX-3225 47
FA-238V/FA-238 47
Built-in Thermistor
FA1612AS 48
FA2016AS 49

MHz Products VCXO / VCSO

VCXO / VCSO
CMOS
VG7050CDN 88
VG-4231CE 89
LV-PECL
VG3225EFN 90
VG5032EFN 90
VG7050EFN 90
VG7050EBN 91
EV7050EAN(VCSO) 92
VG7050EAN(Programmable) 94
VG7050ECN(Programmable) 94
LVDS
VG3225VFN 90
VG5032VFN 90
VG7050VFN 90

MHz Products SPXO / SPSO

CMOS
SG2016CAN 55
SG-210STF 55
SG3225/5032/7050CAN 55
CMOS Programmable
SG-8018 series 57
SG-8101 series 59
CMOS Spread Spectrum
SG-9101 series 61
Programming tool
SG-Writer II 63
LV-PECL
SG2520EHN 64
SG2520EGN 65
SG3225/5032/7050EEN 66
SG3225/5032/7050EAN 67
LV-PECL Programmable
SG-8506CA 69
LV-PECL Selectable
SG-8503CA 71
SG-8504CA 71
LVDS
SG2520VHN 64
SG2520VGN 65
SG3225/5032/7050VEN 66
SG3225/5032/7050VAN 67
HCSL
SG3225HBN 68

MHz Products TCXO / VC-TCXO

TCXO / VC-TCXO
Clipped sine wave
TG2016SMN 76
TG2520SMN 76
TG1612SLN 77
TG2016SLN 78
TG-5006CJ/CG/CE 79
TG2016SKA(AEC-Q100) 129
TG2016SLA(AEC-Q100) 130
CMOS
TG2520CEN 80
TG3225CEN 80
Clipped sine wave or CMOS
TG7050CMN/SMN(4pins) 81
TG7050CKN/SKN(10pins)..... 81
TG-5510CA/TG-5511CA..... 82
(10pins/4pins)
TG-5510CB/TG-5511CB..... 83
(10pins/4pins)
TG5032SKN(10pins) 84
TG5032SMN(4pins)..... 84
TG5032CKN(10pins) 84
TG5032CMN(4pins)..... 84
TG5032CFN/SFN(4pins) 85
TG5032CGN/SGN(10pins)..... 86

Gyro Sensor

XV7021BB..... 102
XV7081BB..... 103
XV7011BB 104
XV7001BB..... 105
XV-3510CB 106

RF Transmitter Module

SR3225SAA 97, 128

Automotive Solutions

kHz Products
Crystal Unit
FC-13A(AEC-Q200)..... 110
MC-30A(AEC-Q200)..... 111
SPXO / SPSO kHz Range
CMOS
SG-3031CMA(AEC-Q100)..... 112
TCXO
TG-3541CEA(DTCXO AEC-Q100) 113
Real Time Clock Module
I2C bus
RA8000CE(AEC-Q100) 114
RA8804CE(AEC-Q100) 118
RA8900CE(AEC-Q200) 119
SPI bus
RA4000CE(AEC-Q100) 116

MHz Products
Crystal Unit
FA2016AA(AEC-Q200)..... 120
FA-238A(AEC-Q200) 121
FA2016ASA(AEC-Q200) 122
SPXO / SPSO MHz Range
CMOS Spread Spectrum
SG-9101CGA(AEC-Q100)..... 126
CMOS Programmable
SG-8101CGA(AEC-Q100)..... 124
CMOS
SG2016CAA(AEC-Q200) 123
SG2520CAA(AEC-Q200) 123
TCXO / VC-TCXO
TG2016SKA(AEC-Q100)..... 129
TG2016SLA(AEC-Q100) 130

RF Transmitter Module
SR3225SAA(AEC-Q100)..... 128

Gyro Sensor
XV-9100/9300CD(AEC-Q100).... 131
XV-9100LV/LP(AEC-Q100)..... 132
XV-9300LV/LP(AEC-Q100)..... 132
XV4001B*/K*(AEC-Q200)..... 133

	Product	Page		Product	Page		Product	Page
E	EV7050EAN(VCSO)	92	R	RX-8571SA/LC	34	S	SR3225SAA	97, 128
F	FA1008AN	42		RX-8731LC	33	T	TG1612SLN	77
	FA-118T	44		RX-8803SA/LC	29		TG2016SKA	129
	FA1210AN	43		RX8804CE	26		TG2016SLA	130
	FA-128	45		RX8900SA/CE	28		TG2016SLN	78
	FA1612AS	48		RX8901CE	20		TG2016SMN	76
	FA2016AA(AEC-Q200)	120	S	SG2016CAA(AEC-Q200)	123		TG2520CEN	80
	FA2016AS	49		SG2016CAN	55		TG2520SMN	76
	FA2016ASA(AEC-Q200)	122		SG-210STF	55		TG3225CEN	80
	FA-20H	46		SG2520CAA(AEC-Q200)	123		TG-3541CE(DTCXO)	16
	FA-238	47		SG2520EGN/VGN	65		TG-3541CEA(DTCXO AEC-Q100)	113
	FA-238V	47		SG2520EHN/VHN	64		TG-5006CJ/CG/CE	79
	FA-238A(AEC-Q200)	121		SG-3031CM	15		TG5032CFN/SFN(4pins)	85
	FC-12M	11		SG-3031CMA(AEC-Q100)	112		TG5032CGN/SGN(10pins)	86
	FC-135	13		SG3225CAN	55		TG5032CKN/CMN	84
	FC-135R	13		SG3225EAN	67		TG5032SKN/SMN	84
	FC-13A(AEC-Q200)	110		SG3225EEN	66		TG-5511/TG-5510CA	82
	FC1610AN	9		SG3225HBN	68		TG-5511/TG-5510CB	83
	FC2012AN	10		SG3225VAN	67		TG7050CKN/CMN	81
	FC3215AN	12		SG3225VEN	66		TG7050SKN/SMN	81
M	MC-146	14		SG5032CAN	55	V	VG3225EFN/VFN	90
	MC-30A(AEC-Q200)	111		SG5032EAN	67		VG-4231CE	89
R	RA8000CE(AEC-Q100)	114		SG5032EEN	66		VG5032EFN/VFN	90
	RA4000CE(AEC-Q100)	116		SG5032VAN	67		VG7050CDN	88
	RA8804CE(AEC-Q100)	118		SG5032VEN	66		VG7050EAN(Programmable)	94
	RA8900CE(AEC-Q200)	119		SG7050CAN	55		VG7050EBN	91
	RX-4035SA/LC	32		SG7050EAN	67		VG7050ECN(Programmable)	94
	RX-4045SA	40		SG7050EEN	66		VG7050EFN/VFN	90
	RX4111CE	25		SG7050VAN	67	X	XV-3510CB	106
	RX-4571LC/SA	35		SG7050VEN	66		XV4001B*/K*(AEC-Q200)	133
	RX-4803SA/LC	30		SG-8018 series	57		XV7001BB	105
	RX4901CE	22		SG-8101 series	59		XV7011BB	104
	RX6110SA	38		SG-8101CGA(AEC-Q100)	124		XV7021BB	102
	RX8010SJ	37		SG-8503CA	71		XV7081BB	103
	RX-8025SA	39		SG-8504CA	71		XV-9100CD(AEC-Q100)	131
	RX-8035SA/LC	31		SG-8506CA	69		XV-9100LV/LP(AEC-Q100)	132
	RX8111CE	24		SG-9101 series	61		XV-9300CD(AEC-Q100)	131
	RX8130CE	27		SG-9101CGA(AEC-Q100)	126		XV-9300LV/LP(AEC-Q100)	132
	RX-8564LC	36		SG-WriterII	63			

■Products Information on Epson Website

Seiko Epson is providing the products information, timing device, sensing device and more.
please access here !

www5.epsondevice.com/en/

Search function

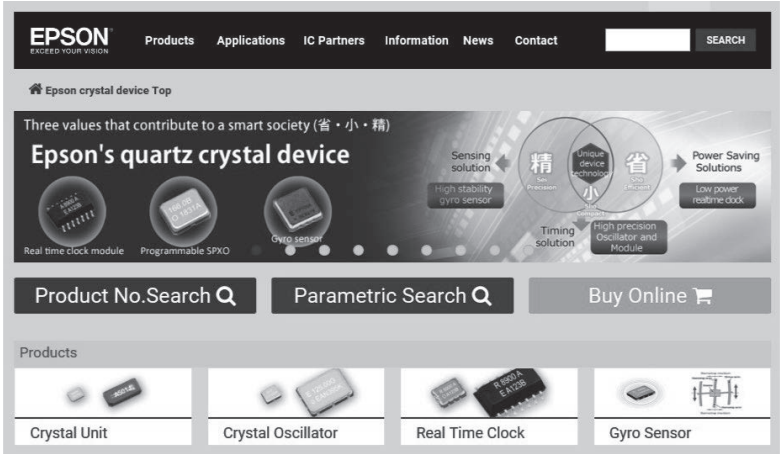

Product Information

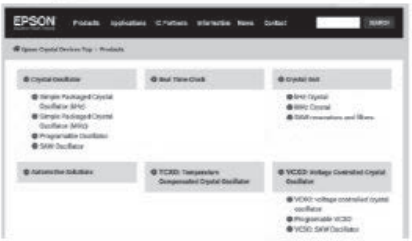

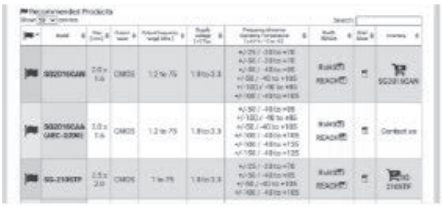

On the product information page, You can download brief sheets and application manuals, and check stocks of web agencies.

Parametric Search

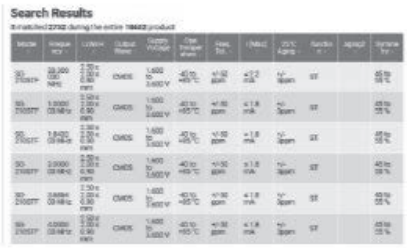

Parametric Search allows you to narrow down the required specifications for each product category. You can also download a detailed data sheet with the product model number on the individual page.

IC Partner

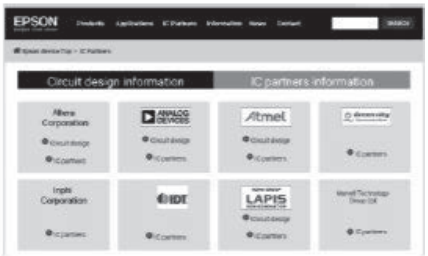

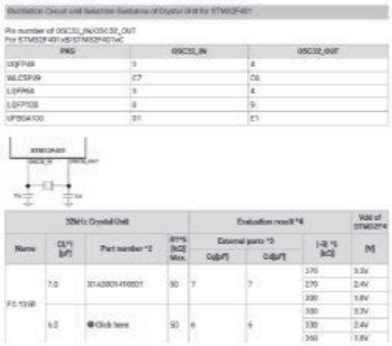

A list of our products that have been tested for operation in cooperation with semiconductor manufacturers is posted as IC partner information.

kHz Products (Crystal Unit, Crystal Oscillator)

kHz Crystal Unit and kHz Crystal Oscillator Recommendation Products

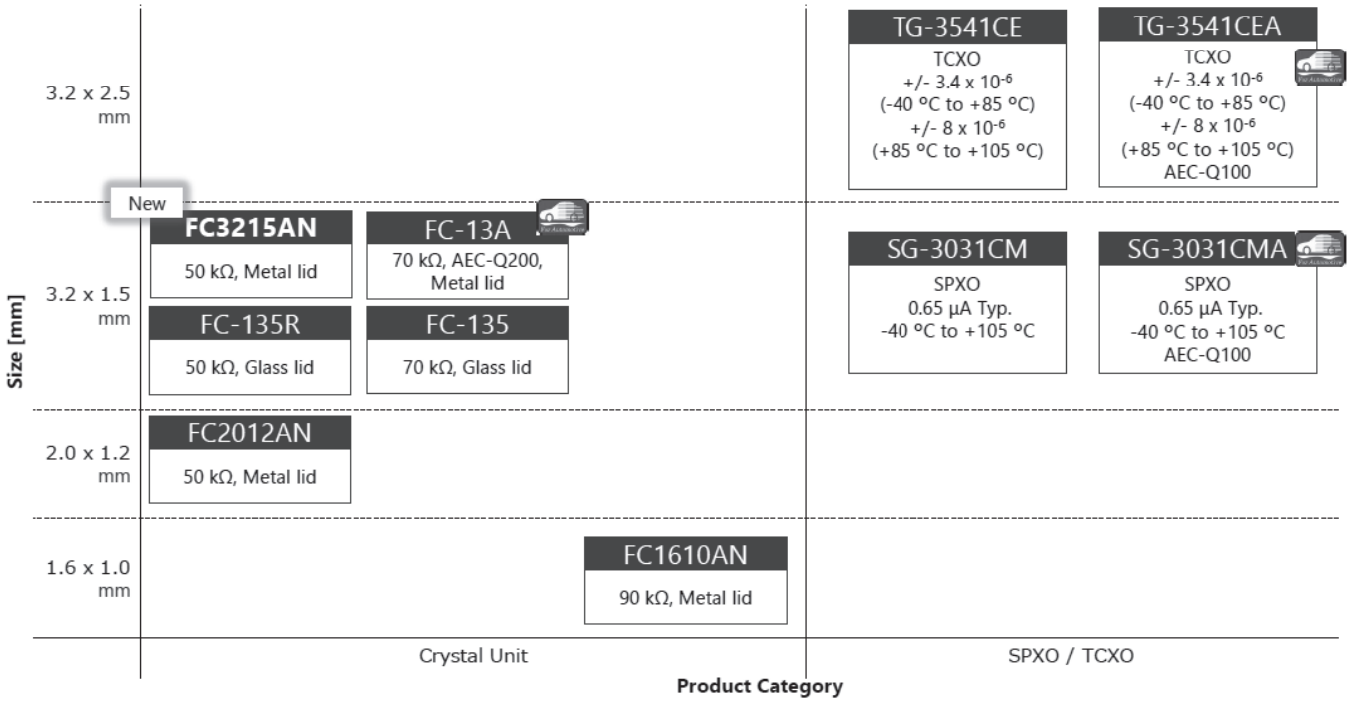

► kHz Crystal Unit

***Please Contact us regarding available frequency other than 32.768 kHz.**

P	Model	Size [mm]	Nominal frequency range	Frequency Tolerance (+25 °C) [× 10^{-6}]	Motional resistance Max. [kΩ]	Load capacitance [pF]	Operating temperature [°C]	Frequency vs temperature characteristics (Turnover Temperature: +25 °C Typ.)
9	**FC1610AN**	1.6 x 1.0 x 0.5t	● 32.768 kHz	±20	90	9 12.5	-40 to +85	(B): -0.04 × 10^{-6} / °C ^{2} Max. f_tem =B (Ti−θx) ^{2}
10	**FC2012AN**	2.05 x 1.2 x 0.6t	● 32.768 kHz	±20	50	9 12.5	-40 to +85	
					60		-40 to +105	
11	**FC-12M**	2.05 x 1.2 x 0.6t	● 32.768 kHz	±20 ±30	90	12.5	-40 to +85	
			32 kHz 77.5 kHz		90 to 65		-40 to +85	
Web Site	**FC-12D**	2.05 x 1.25 x 0.35t	● 32.768 kHz	±20	75	7 9 12.5	-40 to +85	
	FC3215AN	3.2 x 1.5 x 0.9t	● 32.768 kHz	±20	50	9 12.5	-40 to +85	
					60		-40 to +105	
12	**FC-135R**	3.2 x 1.5 x 0.9t	● 32.768 kHz	±20	50	7 9 12.5	-40 to +85	
	FC-135		● 32.768 kHz		70		-40 to +85	
			32 kHz 77.5 kHz		70 to 45		-40 to +85	
13	**MC-146**	7.0 x 1.5 x 1.4t	● 32.768 kHz	±20 ±50	65	7 9 12.5	-40 to +85	
			32 kHz 100 kHz	±50 ±100	65 to 25		-40 to +85	
Automotive	**FC-13A (AEC-Q200)**	3.2 x 1.5 x 0.9t	● 32.768 kHz	±20 ±30 ±50	70	9 12.5	-40 to +125	
Automotive	**MC-30A (AEC-Q200)**	8.0 x 3.8 x 2.54t	● 32.768 kHz	±20 ±50	50	12.5	-40 to +85	
			20 kHz 120 kHz	±50 ±100	55 to 12			

► kHz Crystal Oscillator

►SPXO

P	Model	Size [mm]	Nominal frequency range	Frequency Tolerance (+25 °C) [x 10^{-6}]	Operating temperature (T_use) [°C]	Supply voltage [V]	Current consumption Max. [µA] (V_{CC} = 3.3 V, No load, T_use)	Output load condition [pF]	Output control
14	**SG-3031CM**	3.2 × 1.5 × 0.9t	● 32.768 kHz	5 ± 23	-40 to +85	1.1 to 5.5	1.3	15	V_{IO}
Automotive	**SG-3031CMA (AEC-Q100)**								

►TCXO

P	Model	Size [mm]	Nominal frequency range	Frequency tolerance [x 10^{-6}] / Operating temperature (T_use) [°C]	Supply voltage [V]	Current consumption Max. [µA] (V_{CC} = 3.3 V, No load, T_use)	Output load condition [pF]	Output control
15	**TG-3541CE**	3.2 × 2.5 × 1.0t	● 32.768 kHz	±3.4 / -40 to +85 ±5.0 / -40 to +85 ±8.0 / +85 to +105	1.5 to 5.5	3.0	30	OE
Automotive	**TG-3541CEA (AEC-Q100)**							

kHz RANGE CRYSTAL UNIT

FC1610AN

Product Number
X1A000121xxxx00

- Frequency range : 32.768 kHz
- External dimensions : 1.65 × 1.05 × 0.5 mm
- Overtone order : Fundamental
- Applications : Small communications devices

Specifications (characteristics)

Item	Symbol	Specifications	Conditions / Remarks
Nominal frequency range	f_nom	32.768 kHz	
Storage temperature range	T_stg	-55 °C to +125 °C	Storage as single product.
Operating temperature range	T_use	-40 °C to +85 °C	
Level of drive	DL	0.1 μW Typ. (0.5 μW Max.)	
Frequency tolerance (standard)	f_tol	$\pm 20 \times 10^{-6}$	+25 °C, DL = 0.1 μW
Turnover temperature	Ti	+25 °C ± 5 °C	
Parabolic coefficient	B	-0.04×10^{-6} / °C^2 Max.	
Load capacitance	CL	9 pF, 12.5 pF	Please specify
Motional resistance (ESR)	R1	90 kΩ Max.	
Motional capacitance	C1	6.0 fF Typ.	
Shunt capacitance	C0	1.2 pF Typ.	
Frequency aging	f_age	$\pm 3 \times 10^{-6}$ / year Max.	+25 °C, First year

Product name (Standard form)

FC1610AN	32.768000kHz	12.5	+20.0-20.0
①	②	③	④

①Model ②Frequency ③Load capacitance (pF) ④Frequency tolerance ($\times 10^{-6}$, +25 °C)

External dimensions (Unit:mm)

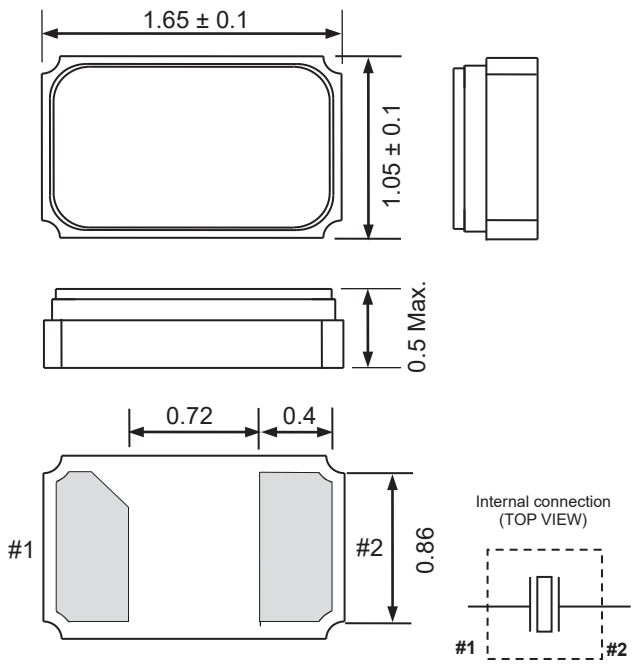

Footprint (Recommended) (Unit:mm)

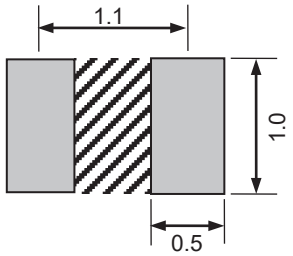

∗Do not design any circuit patterns in the shaded area.

kHz RANGE CRYSTAL UNIT

FC2012AN

Low ESR 50 kΩ Max.

Product Number
FC2012AN: X1A000171xxxx18

- Frequency range : 32.768 kHz
- External dimensions : 2.05 x 1.2 x 0.6 mm
- Overtone order : Fundamental
- Applications : IoT Devices, Modules, etc.

Specifications (characteristics)

Item	Symbol	Specifications	Conditions / Remarks
Nominal frequency range	f_nom	32.768 kHz	
Storage temperature range	T_stg	-55 °C to +125 °C	Storage as single product.
Operating temperature range	T_use	-40 °C to +105 °C	
Level of drive	DL	0.5 μW Max.	
Frequency tolerance (standard)	f_tol	±20 x 10^{-6}	+25 °C, DL = 0.1 μW
Turnover temperature	Ti	+25 °C ± 5 °C	
Parabolic coefficient	B	-0.04 x 10^{-6} / °C^2 Max.	
Load capacitance	CL	9 pF, 12.5 pF	Contact us for other CL values
Motional resistance (ESR)	R1	35 kΩ Typ..	+25 °C,
		50 kΩ Max.	-40 °C to +85 °C
		60 kΩ Max.	-40 °C to +105 °C
Motional capacitance	C1	8.4 fF Typ.	
Shunt capacitance	C0	1.6 pF Typ.	
Frequency aging	f_age	±3 x 10^{-6} / year Max.	+25 °C, First year

Product name (Standard form) FC2012AN ① 32.768000kHz ② 12.5 ③ +20.0-20.0 ④

①Model ②Frequency ③Load capacitance (pF) ④Frequency tolerance (× 10^{-6}, +25 °C)

External dimensions (Unit:mm)

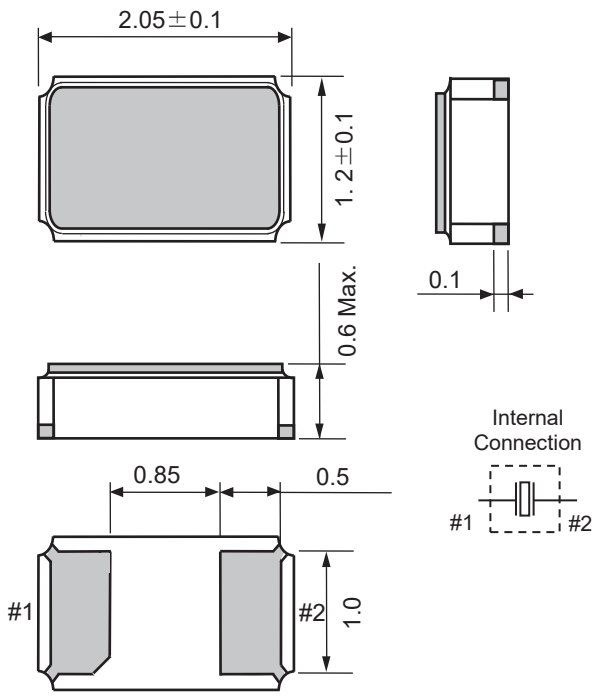

Footprint (Recommended) (Unit:mm)

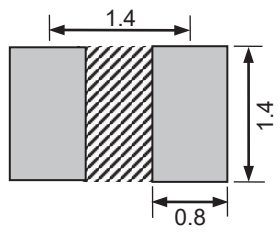

*Do not design any circuit patterns in the shaded area.

kHz RANGE CRYSTAL UNIT

FC-12M / FC-12M TYPE

Product Number
FC-12M : X1A000061xxxx00
FC-12M TYPE : X1A000021xxxx00

- Frequency range : FC-12M···32.768 kHz
  : FC-12M TYPE···32 kHz to 77.5 kHz
- External dimensions : 2.05 x 1.2 x 0.6 mm
- Overtone order : Fundamental
- Applications : Small communications devices

Specifications (characteristics)

Item	Symbol	Specifications		Conditions / Remarks
		FC-12M	FC-12M TYPE	
Nominal frequency range	f_nom	32.768 kHz	32 kHz to 77.5 kHz	Please contact us about available frequencies.
Storage temperature range	T_stg	-55 °C to +125 °C		Storage as single product.
Operating temperature range	T_use	-40 °C to +85 °C		
Level of drive	DL	0.5 μW Max.		
Frequency tolerance (standard)	f_tol	±20 x 10^{-6} ±30 x 10^{-6}		+25 °C, DL = 0.1 μW Please ask for tighter tolerance
Turnover temperature	Ti	+25 °C ± 5 °C		
Parabolic coefficient	B	-0.04 x 10^{-6} / °C^2 Max.		
Load capacitance	CL	12.5 pF		Please specify
Motional resistance (ESR)	R1	90 kΩ Max.	90 kΩ to 65 kΩ	
Motional capacitance	C1	6.4 fF Typ.	7.0 fF to 2.7 fF	
Shunt capacitance	C0	1.3 pF Typ.	1.6 pF to 0.8 pF	
Frequency aging	f_age	±3 x 10^{-6} / year Max.		+25 °C, First year

Product name (Standard form): FC-12M ① 32.768000kHz ② 12.5 ③ +20.0-20.0 ④

①Model ②Frequency ③Load capacitance (pF) ④Frequency tolerance (× 10^{-6}, +25 °C)

External dimensions (Unit:mm)

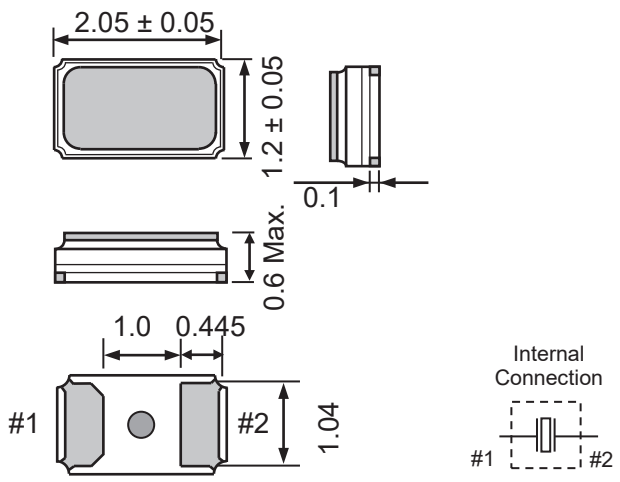

Footprint (Recommended) (Unit:mm)

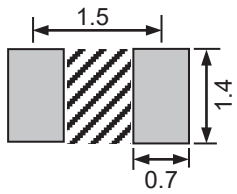

*Do not design any circuit patterns in the shaded area.

kHz RANGE CRYSTAL UNIT

FC3215AN

Low ESR 50 kΩ Max.

Product Number
FC3215AN: X1A000161xxxx16

- •Frequency range : 32.768 kHz
- •External dimensions : 3.2 x 1.5 x 0.9 mm
- •Overtone order : Fundamental
- •Applications : IoT Devices, Modules, etc.

Specifications (characteristics)

Item	Symbol	Specifications	Conditions / Remarks
Nominal frequency range	f_nom	32.768 kHz	
Storage temperature range	T_stg	-55 °C to +125 °C	Storage as single product.
Operating temperature range	T_use	-40 °C to +105 °C	
Level of drive	DL	0.5 μW Max.	
Frequency tolerance (standard)	f_tol	±20 x 10^{-6}	+25 °C, DL = 0.1 μW
Turnover temperature	Ti	+25 °C ± 5 °C	
Parabolic coefficient	B	-0.04 x 10^{-6} / °C^2 Max.	
Load capacitance	CL	9 pF, 12.5 pF	Contact us for other CL values
Motional resistance (ESR)	R1	35 kΩ Typ..	+25 °C,
		50 kΩ Max.	-40 °C to +85 °C
		60 kΩ Max.	-40 °C to +105 °C
Motional capacitance	C1	8.4 fF Typ.	
Shunt capacitance	C0	1.6 pF Typ.	
Frequency aging	f_age	±3 x 10^{-6} / year Max.	+25 °C, First year

Product name (Standard form) FC3215AN ① 32.768000kHz ② 12.5 ③ +20.0-20.0 ④

①Model ②Frequency ③Load capacitance (pF) ④Frequency tolerance (× 10^{-6}, +25 °C)

External dimensions (Unit:mm)

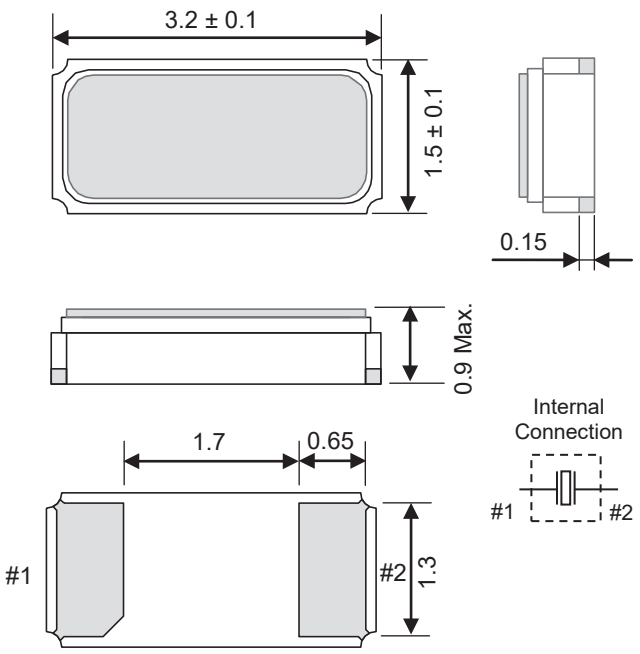

Footprint (Recommended) (Unit:mm)

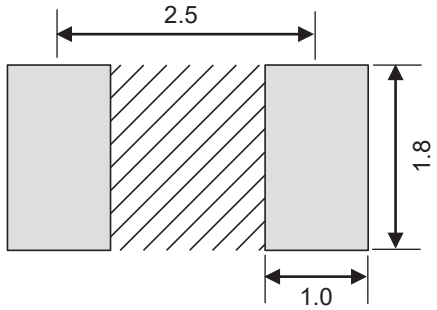

∗Do not design any circuit patterns in the shaded area.

kHz RANGE CRYSTAL UNIT

FC-135R
FC-135 / FC-135 TYPE

RoHS Compliant

Product Number
FC-135R : X1A000141xxxx00
FC-135 : Q13FC1350xxxx00
FC-135 TYPE : Q14FC1350xxxx00

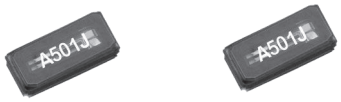

- Frequency range : FC-135R / FC-135···32.768 kHz
  : FC-135 TYPE···32 kHz to 77.5 kHz
- External dimensions : 3.2 × 1.5 × 0.80 mm
- Overtone order : Fundamental
- Applications : Small communications devices

Specifications (characteristics)

Item	Symbol	Specifications			Conditions / Remarks
		FC-135R	FC-135	FC-135 TYPE	
Nominal frequency range	f_nom	32.768 kHz	32.768 kHz	32 kHz to 77.5 kHz	Please contact us about available frequencies.
Storage temperature range	T_stg	-55 °C to +125 °C			Storage as single product.
Operating temperature range	T_use	-40 °C to +85 °C (+105 °C)			Please contact us about +85 °C < T_use
Level of drive	DL	0.5 μW (1.0 μW Max.)			Please contact us if you require 1.0μW Max.
Frequency tolerance (standard)	f_tol	$\pm 20 \times 10^{-6}$			+25 °C, DL=0.1 μW Please ask for tighter tolerance
Turnover temperature	Ti	+25 °C ±5 °C			
Parabolic coefficient	B	-0.04×10^{-6} / °C^2 Max.			
Load capacitance	CL	7 pF, 9 pF, 12.5 pF			Please specify
Motional resistance (ESR)	R1	50 kΩ Max.	70 kΩ Max.	70 kΩ to 45 kΩ	
Motional capacitance	C1	3.4 fF Typ.	3.4 fF Typ.	3.7 fF to 1.6 fF	
Shunt capacitance	C0	1.0 pF Typ.	1.0 pF Typ.	1.3 pF to 0.5 pF	
Frequency aging	f_age	$\pm 3 \times 10^{-6}$ / year Max.			+25 °C, First year

Product name (Standard form)
FC-135R ① 32.768000kHz ② 12.5 ③ +20.0-20.0 ④
①Model ②Frequency ③Load capacitance (pF) ④Frequency tolerance (× 10^{-6}, +25 °C)

External dimensions (Unit:mm)

FC-135R / FC-135

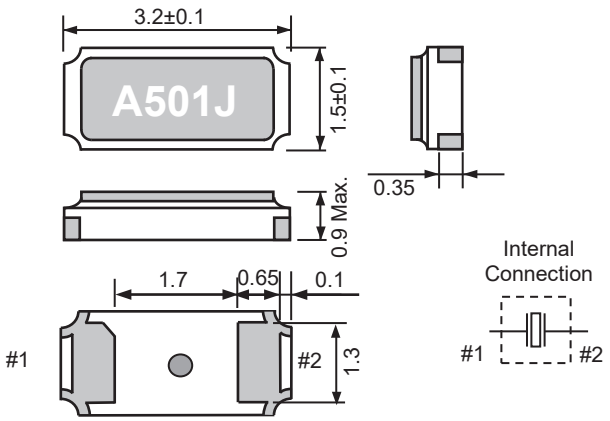

Footprint (Recommended) (Unit:mm)

FC-135R / FC-135

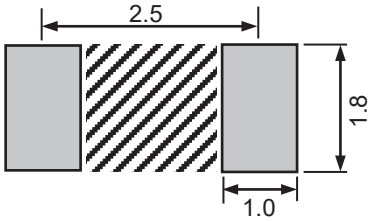

*Do not design any circuit patterns in the shaded area.

kHz RANGE CRYSTAL UNIT

MC-146 / MC-146 TYPE

Product Number
MC-146 : Q1xMC1462xxxx0X

- Frequency range : MC-146…32.768 kHz
  : MC-146 TYPE…32 kHz to 100 kHz
- External dimension : 7.0 × 1.5 × 1.4 mm
- Overtone order : Fundamental
- Applications : Small communications devices

Specifications (characteristics)

Item	Symbol	Specifications		Conditions / Remarks
		MC-146	MC-146 TYPE	
Nominal frequency range	f_nom	32.768 kHz	32 kHz to 100 kHz	Please contact us about available frequencies.
Storage temperature	T_stg	-55 °C to +125 °C		Storage as single product.
Operating temperature	T_use	-40 °C to +85 °C		
Level of drive	DL	1.0 μW Max.		Operating Drive level 0.5 μW Max.
Frequency tolerance (standard)	f_tol	$\pm 20 \times 10^{-6}$, $\pm 50 \times 10^{-6}$	$\pm 50 \times 10^{-6}$, $\pm 100 \times 10^{-6}$	+25 °C, DL=0.1 μW
Turnover temperature	Ti	+25 °C ± 5 °C		
Parabolic coefficient	B	-0.04×10^{-6} / °C^2 Max.		
Load capacitance	CL	7 pF, 9 pF, 12.5 pF		Please specify
Motional resistance (ESR)	R1	65 kΩ Max.	65 kΩ to 25 kΩ	
Motional capacitance	C1	1.9 fF Typ.	2.5 fF to 0.6 fF	
Shunt capacitance	C0	0.8 pF Typ.	1.2 pF to 0.5 pF	
Frequency aging	f_age	$\pm 3 \times 10^{-6}$ / year Max.	$\pm 5 \times 10^{-6}$ / year Max.	+25 °C, First year

Product name (Standard form): MC-146 ① 32.768000kHz ② 12.5 ③ +20.0-20.0 ④

①Model ②Frequency ③Load capacitance(pF) ④Frequency tolerance(× 10^{-6}, +25 °C)

External dimensions

(Unit:mm)

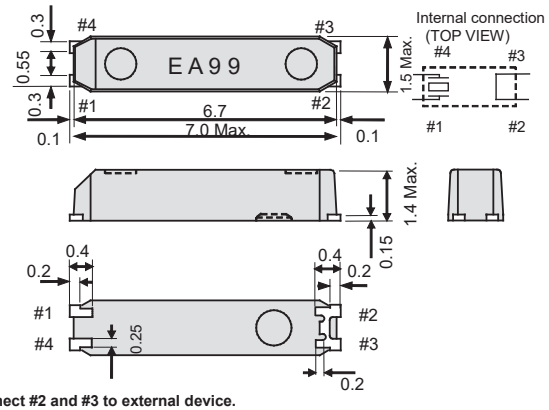

Do not connect #2 and #3 to external device.
The metal case inside of the molding compound may be exposed on the top or bottom of this product.
This purely cosmetic and does not have any effect on quality, reliability or electrical specs.

Footprint (Recommended)

(Unit:mm)

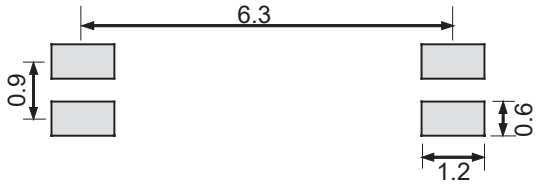

Product Number
SG-3031CM : X1B000391000116

CRYSTAL OSCILLATOR (SPXO)

32.768 kHz

SG-3031CM

- Built-in 32.768 kHz crystal unit allows adjustment-free efficient operation.
- Operation temperature -40 °C to +105 °C
- Use of CMOS IC enables reduction of current consumption.
- V_{IO} controls swing amplitude.

- Applications
  Industrial, Security, Smart Meter,
  Clock for Time counting and Sleep function

Specifications (characteristics)

Item	Symbol	Specifications	Remarks
Output frequency range	fo	32.768 kHz	
Supply voltage	V_{CC}	1.2 V to 5.5 V	V_{CC} < 1.5 V, V_{IO} = V_{CC}
Interface power supply voltage	V_{IO}	1.2 V to 5.5 V	
Storage temperature range	T_stg	-55 °C to +125 °C	Store as bare product after unpacking
Operating temperature range	T_use	-40 °C to +105 °C	
Frequency tolerance	f_tol	+5 ± 23 × 10^{-6}	+25 °C, V_{CC} = 3.3 V
Frequency temperature coefficient	fo-Tc	-120 × 10^{-6} to +10 × 10^{-6}	-20 °C to +70 °C (V_{CC} = 3.3 V, +25 °C is reference)
		-240 × 10^{-6} to +10 × 10^{-6}	-40 °C to +85 °C (V_{CC} = 3.3 V, +25 °C is reference)
		-420 × 10^{-6} to +10 × 10^{-6}	-40 °C to +105 °C (V_{CC} = 3.3 V, +25 °C is reference)
Frequency voltage coefficient	fo-V_{CC}	±1 × 10^{-6} / V Max.	V_{CC} = 1.5 V to 5.5 V
		±5 × 10^{-6} / V Max.	V_{CC} = 1.2 V to 1.5 V
Current consumption (V_{CC} Pin)	I_{CC}	0.30 μA Typ. / 0.65 μA Max.	V_{CC} = 1.2 V to 5.5 V
Current consumption (V_{CC}+V_{IO} Pin)	I_{CC}+I_{IO}	0.38 μA Typ.	V_{CC} = V_{IO} = 1.2 V, No load condition
		0.65 μA Typ. / 1.3 μA Max. (+105 °C)	V_{CC} = V_{IO} = 3.3 V, No load condition
Symmetry	SYM	45 % to 55 %	1/2V_{CC}(V_{IO}) level, 1.5 V to 5.5 V
		40 % to 60 %	1/2V_{CC}(V_{IO}) level, V_{CC} < 1.5 V
Output voltage	V_{OH} / V_{OL}	V_{IO} - 0.4V Min. / 0.4V Max.	I_{OH} = -0.4mA / I_{OL} = 0.4mA, V_{IO} = 1.5 V to 5.5 V
		V_{IO} - 0.2V Min. / 0.2V Max.	I_{OH} = -0.1mA / I_{OL} = 0.1mA, V_{IO} = 1.2 V to 1.5 V
Output load condition (CMOS)	L_CMOS	15 pF Max.	CMOS load
Rise time / Fall time	tr/tf	200 ns Max.	20 % V_{IO} to 80 % V_{IO} level, V_{IO} = 1.2 V to 5.5 V
		100 ns Max.	20 % V_{IO} to 80 % V_{IO} level, V_{IO} = 1.8 V to 5.5 V
Start-up time	t_str	0.15 s Typ. / 0.45 s Max.	V_{CC} = 1.5 V to 5.5 V
		1.0 s Max.	V_{CC} = 1.2 V to 1.5 V
Frequency aging	f_age	±5 × 10^{-6} / year Max.	+25 °C, V_{CC} = 3.3 V, First year

Unless otherwise stated, characteristics (specifications) shown in the above table are based on the rated operating temperature and voltage condition.

Block diagram

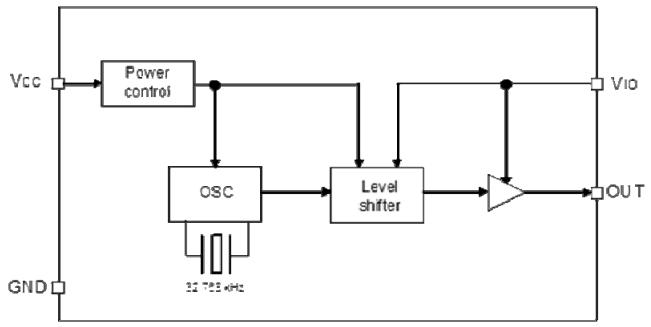

V_{IO} is a power supply pin for OUT output and can also be used as an OE pin.Set V_{IO} to 0 V when setting Disable.
V_{CC} is a power supply pin for operating the 32.768 kHz oscillation. Power consumption can be minimized by minimizing the applied voltage of both power supplies.
However, when V_{CC} < 1.5 V, V_{IO} = V_{CC}.

External dimension (Unit:mm)

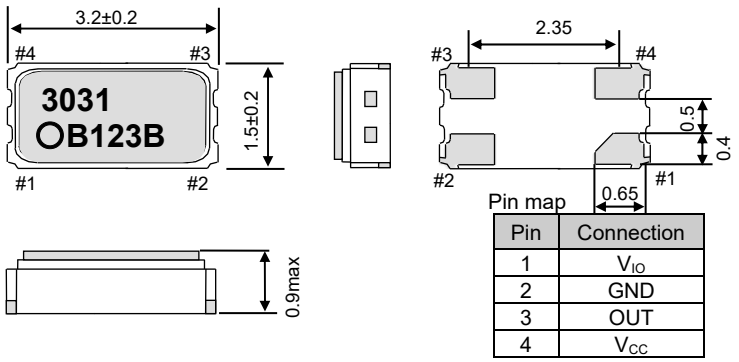

Pin map

Pin	Connection
1	V_{IO}
2	GND
3	OUT
4	V_{CC}

Footprint(rference) (Unit:mm)

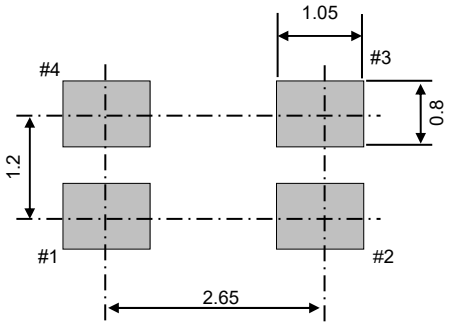

To maintain stable operation, provide a 0.01 uF to 0.1 uF by-pass capacitor at a location as near as possible to the power source terminal of the crystal product (between V_{CC} – GND, V_{IO}-GND).

TCXO

TG-3541CE

Pb Free
RoHS Compliant

Product Number
TG-3541CE XA: X1B000351000100
TG-3541CE XB: X1B000351000200

- Output frequency : 32.768 kHz
- Built-in 32.768 kHz-DTCXO
- Supply voltage : 1.5 V to 5.5 V
- Frequency tolerance :
  - XA ± 1.9 x 10^{-6} (0 ºC to +50 ºC)
    ± 3.4 x 10^{-6} (-40 ºC to +85 ºC)
    ± 8.0 x 10^{-6} (+85 ºC to +105 ºC)
  - XB ± 3.8 x 10^{-6} (0 ºC to +50 ºC)
    ± 5.0 x 10^{-6} (-40 ºC to +85 ºC)
    ± 8.0 x 10^{-6} (+85 ºC to +105 ºC)

Specifications (characteristics)

Item	Symbol		Specifications	Conditions
Output frequency range	fo		32.768 kHz	
Supply voltage	V_{CC}		1.5 V to 5.5 V	
Storage temperature	T_stg		-55 °C to +125 °C	
Operating temperature	T_use		-40 °C to +105 °C	
Frequency / Temperature Characteristics	fo_Tc	XA	±1.9 × 10^{-6}	Ta = 0 °C ~ +50 °C
			±3.4 × 10^{-6}	Ta = -40 °C ~ +85 °C
			±8.0 × 10^{-6}	Ta = +85 °C ~ +105 °C
		XB	±3.8 × 10^{-6}	Ta = 0 °C ~ +50 °C
			±5.0 × 10^{-6}	Ta = -40 °C ~ +85 °C
			±8.0 × 10^{-6}	Ta = +85 °C ~ +105 °C
Current consumption	Icc		1.0 μA Typ./3.0 μA Max.	No load condition, Vcc = 3.0 V
Disable current	I_dis		1.5 μA Max.	OE=GND, Vcc = 3.0 V
Symmetry	SYM		40 % to 60 %	50 % Vcc level
Output voltage	V_{OH}		80 % Vcc Min.	IOH=-0.5 mA, Vcc=3.0 V
	V_{OL}		20% Vcc Max.	IOL=0.5 mA, Vcc=3.0 V
Output load condition(CMOS)	L_CMOS		30 pF Max.	
Start-up time	t_str		1 s Max.	Ta= +25 °C , Vcc=1.5 V to 5.5 V
Frequency aging	f_aging		±3 × 10^{-6}	Ta= +25°C, Vcc=3.0 V, first year

External dimensions (Unit:mm)

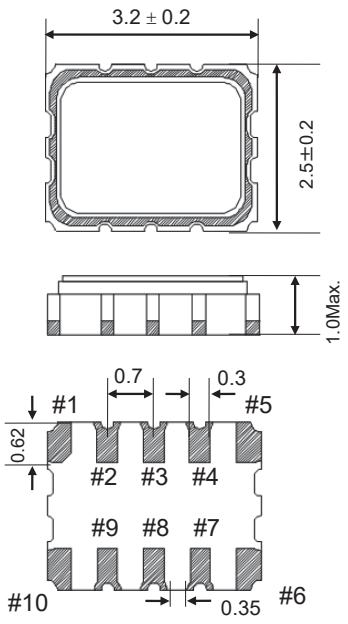

Pin	Connection
1	OE
2	Vcc
3	Vcc
4	OUT
5	GND
6	N.C.
7	GND
8	GND
9	GND
10	N.C.

∗OE is active HIGH input,
Do not leave floating.
∗N.C. must be left open.
∗Connect all GND / V_{CC}
to GND / V_{CC}.

Frequency temperature characteristics

■ 32.768 kHz-DTCXO Frequency temperature characteristics (Example)

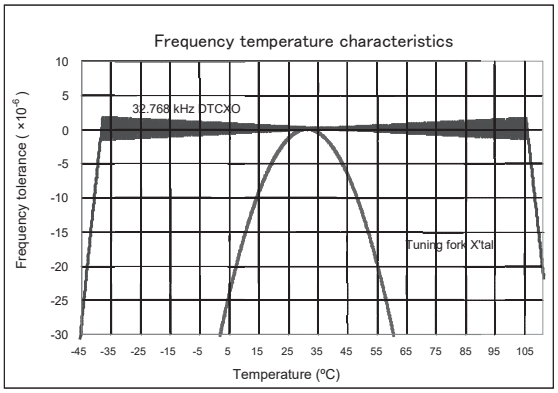

Real Time Clock modules (RTC modules)

Epson's crystal integrated RTC modules offer variety of features such as lower power, accurate clock/date information, Wake-up Timer, Power Switch, and Time-Stamp function. This will help your system lower power with multi-functionality.

Features

- Our lower power design enables our RTC modules to store abnormality on system and time errors even when the main MCU is not in operation
- Tuning Folk Crystal unit and DTCXO (Some products only) integrated RTC modules can assure and manage time information with higher accuracy

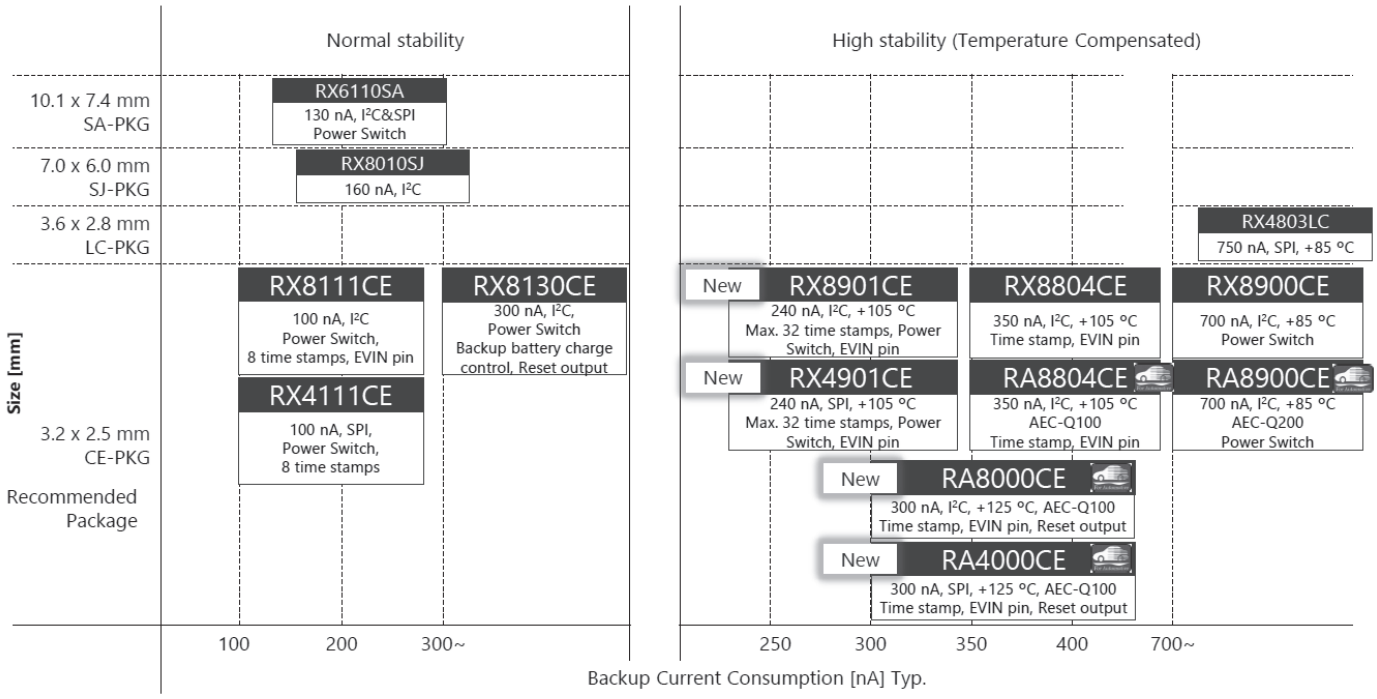

Features and Functions

Category	Summary	Use case recommendations, etc
Frequency Tolerance	The variance based on 32.768 kHz under the operating temperature on the integrated crystal inside. For an RTC module, ±23 x 10^{-6} approximately equals to 1 minute per month. Crystal unit inside has a quadratic curve whose peak temperature stays at a room temperature. Therefore, time accuracy varies depending on the external temperature. Epson also offers temperature compensated RTC modules whose timing has been already adjusted within the operating temperature.	Temperature compensated models are suitable when.. -your system will be installed outside or a hotter place where the temperature may change drastically. -your system needs time accuracy with a standalone condition (Best accuracy option: ±3.4 x 10^{-6}≒9 seconds per month)
Backup current consumption	Consumption value when RTC module is individually in operation, whereas the system's main MCU is on sleep mode. " Max." shows the maximum value within the operating temperature (Ta).	Lower power RTC modules are suitable for - your system that operates with a battery. - your system that goes to sleep-mode for a long period Our low power RTC modules can manage time information or system behavior for a long term.
Time-Stamp function	This stores the time data when an event occurs. Time-stamp functions followed by several triggers. For products with EVIN pin, triggers interlock with EVIN pin inputs. For products without EVIN pin, triggers interlock with RTC module's internal operation or Bus access.	RTC modules with time-stamp are suitable for applications such as - anti-tampering for smart meters or security systems - abnormality detection for factory automation
Power Switch	This monitors the main power condition, and this will automatically change the power source to back-up mode when the voltage on the main power reduces. Please refer to application manuals for details since functions vary depending on each product.	By simplifying Diode-OR circuit, it will help reduce a leak current, as well as utilize an engineering resource and PCB area.

3.2 x 2.5 x 1.0t (CE package) Recommendation package

P	Model	Interface	Specifications								Functions					
			Operating temperature Ta [°C]		Frequency Tolerance [x 10^{-6}]				Backup current consumption [μA] 3.0V							
			Min.	Max.	+25 °C	-40 °C to +85 °C	-40 °C to +105 °C	-40 °C to +125 °C	Typ. (25 °C)	Max. (Ta = Max.)	Time Stamp	Power Switch	EVIN pin	User Memory	Timer	Others
20	RX8901CE	I²C	-40	+105	-	±3.0 ±5.0	±5.0 ±8.0	-	0.24	1.5	Max.32	✓	2 or 3	256 bit	24 bit x 1 ch. to 32 years	
22	RX4901CE	SPI	-40	+105	-	±3.0 ±5.0	±5.0 ±8.0	-	0.24	1.5	Max.32	✓	0 to 2	256 bit	24 bit x 1 ch. to 32 years	
Automo tive	RA8000CE (AEC-Q100)	I²C	-40	+125	-	±5.0	±8.0	±50.0	0.3	1.7	2	-	0 or 2	-	24 bit x 1 ch. to 32 years	Reset output with Delay, SOUT pin
Automo tive	RA4000CE (AEC-Q100)	SPI	-40	+125	-	±5.0	±8.0	±50.0	0.3	1.7	2	-	0 to 2	-	24 bit x 1 ch. to 32 years	Reset output with Delay, SOUT pin

3.2 x 2.5 x 1.0t (CE package) Recommendation package

P	Model	Interface	Specifications								Functions					
			Operating temperature Ta [°C]		Frequency Tolerance [x 10^{-6}]				Backup current consumption [μA] 3.0V							
			Min.	Max.	+25 °C	-40 °C to +85 °C	-40 °C to +105 °C	-40 °C to +125 °C	Typ. (25 °C)	Max. (Ta = Max.)	Time Stamp	Power Switch	EVIN pin	User Memory	Timer	Others
24	RX8111CE	I²C	-40	+85	±11.5 ±23.0	-	-	-	0.1	0.45	8	✓	1	512 bit	24 bit x 1 ch. to 32 years	
25	RX4111CE	SPI	-40	+85				-	0.1	0.45	8	✓	-	512 bit	24 bit x 1 ch. to 32 years	
26	RX8804CE	I²C	-40	+105	-	±3.4 ±5.0	±8.0	-	0.35	1.5	1	-	1	-	16 bit x 1ch. to 7.5 years	SOUT pin
27	RX8130CE	I²C	-40	+85	5±23	-	-	-	0.3	0.5	-	✓	-	-	16 bit x 1 ch. to 7.5 years	Backup battery charge control, Reset output with Delay
28	RX8900CE	I²C	-40	+85		±3.4 ±5.0	-	-	0.7	1.4	-	✓	-	-	12 bit x 1ch. to 2.8 days	Built-in Temp. Sensor
Automo tive	RA8804CE (AEC-Q100)	I²C	-40	+105	-		±8.0	-	0.35	1.5	1	-	1	-	16 bit x 1ch. to 7.5 years	SOUT pin
Automo tive	RA8900CE (AEC-Q200)	I²C	-40	+85			-	-	0.7	1.4	-	✓	-	-	12 bit x 1ch. to 2.8 days	Built-in Temp. Sensor

3.6 x 2.8 x 1.2t (LC package / VSOJ-12 pin)

P	Model	Interface	Specifications							Functions					
			Operating temperature Ta [°C]		Frequency Tolerance [x 10^{-6}]			Backup current consumption [μA] 3.0 V							
			Min.	Max.	+25 °C	-40 °C to +85 °C	-40 °C to +105 °C	Typ. (25 °C)	Max. (Ta = Max.)	Time Stamp	Power Switch	EVIN pin	User Memory	Timer	Others
29	RX-8803LC	I²C	-40	+85	-	±3.4 ±5.0	-	0.75	2.1	-	-	1	-	to 2.8 days	Time sync. with 1 PPS
30	RX-4803LC	SPI						0.75	2.1	-	-	1	-	to 2.8 days	Time sync. with 1 PPS
31	RX-8035LC	I²C			5±23	-		0.4	1.2	1	✓	1	-	-	
32	RX-4035LC	SPI			5±5 0±5			0.4	1.2			1	-	-	
33	RX-8731LC	I²C			5±23			0.35	1.4	-	-	-	EEPROM: 80 bit ID-ROM: 48 bit	to 2.8 days	
34	RX-8571LC	I²C						0.22	0.4	-	-	-	128 bit	to 7.5 years	DAS pin
35	RX-4571LC	SPI						0.32	0.95	-	-	-	-	to 2.8 days	
36	RX-8564LC	I²C						0.275	0.7	-	-	-	-	to 255 min.	

6.3 x 5.2 x 1.4t (NB package / SON-22 pin)

P	Model	Interface	Specifications							Functions					
			Operating temperature Ta [°C]		Frequency Tolerance [x 10^{-6}]			Backup current consumption [μA] 3.0 V							
			Min.	Max.	+25 °C	-40 °C to +85 °C	-40 °C to +105 °C	Typ. (25 °C)	Max. (Ta = Max.)	Time Stamp	Power Switch	EVIN pin	User Memory	Timer	Others
Web Site	RX-8025NB	I²C	-40	+85	5±5	-	-	0.48	1.2	-	-	-	-	-	
	RX-4045NB	SPI			0±5			0.48	1.2	-	-	-	-	-	
	RX-8571NB	I²C			5±23			0.2	0.4	-	-	-	128 bit	to 7.5 years	DAS pin
	RX-4571NB	SPI						0.32	0.95	-	-	-	-	to 2.8 days	

7.0 x 6.0 x 2.65t (SJ package / SOP-8 pin)

P	Model	Interface	Specifications							Functions					
			Operating temperature Ta [°C]		Frequency Tolerance [x 10^{-6}]			Backup current consumption [μA] 3.0 V							
			Min.	Max.	+25 °C	-40 °C to +85 °C	-40 °C to +105 °C	Typ. (25 °C)	Max. (Ta = Max.)	Time Stamp	Power Switch	EVIN pin	User Memory	Timer	Others
37	RX8010SJ	I²C	-40	+85	5±23	-	-	0.16	0.32	-	-	-	128 bit	to 7.5 years	Common pin connection with SOP-8

10.1 x 7.4 x 3.3t (SA package / SOP-14 pin)

P	Model	Interface	Specifications							Functions					
			Operating temperature Ta [°C]		Frequency Tolerance [x 10^{-6}]			Backup current consumption [μA] 3.0 V							
			Min.	Max.	+25 °C	-40 °C to +85 °C	-40 °C to +105 °C	Typ. (25 °C)	Max. (Ta = Max.)	Time Stamp	Power Switch	EVIN pin	User Memory	Timer	Others
38	RX6110SA	SPI & I²C	-40	+85	5±23	-	-	0.16	0.32	-	✓	-	128 bit	to 7.5 years	
28	RX8900SA	I²C			-	±3.4 ±5.0		0.7	1.4	-	✓	-	-	to 2.8 days	Built-in Temp. Sensor
29	RX-8803SA	I²C						0.75	2.1		-	1		to 2.8 days	Time sync. with 1 PPS
30	RX-4803SA	SPI						0.75	2.1	-	-	1		to 2.8 days	Time sync. with 1 PPS
31	RX-8035SA	I²C			5±23 5±5 0±5	-		0.35	1.2	1	✓	2	-	-	
32	RX-4035SA	SPI						0.35	1.2	1	✓	2	-	-	
39	RX-8025SA	I²C			5±5 0±5			0.48	1.2	-	-	-	-	-	
40	RX-4045SA	SPI						0.48	1.2	-	-	-	-	-	
34	RX-8571SA	I²C			5±23			0.2	0.4	-	-	-	128 bit	to 7.5 years	DAS pin
35	RX-4571SA	SPI						0.32	0.95	-	-	-	-	to 2.8 days	
Web site	RA8803SA (AEC-Q200)	I²C			-	±3.4 ±5.0		0.75	2.1	-	-	1	-	to 2.8 days	Time sync. with 1 PPS
Web site	RA4803SA (AEC-Q200)	SPI						0.75	2.1	-	-	1	-	to 2.8 days	Time sync. with 1 PPS
Web site	RA-8565SA (AEC-Q200)	I²C			5±23	-		1.0	1.6	-	-	-	-	to 255 min.	
Web site	RA-4565SA (AEC-Q200)	SPI						0.8	1.6	-	-	-	-	to 255 min.	

Pb Free
RoHS Compliant

Product Number (2,000 pcs / Reel)
RX8901CE XS A0 : X1B000481000115
RX8901CE XB A0 : X1B000481000215
RX8901CE XS B0 : X1B000481000315
RX8901CE XB B0 : X1B000481000415

REAL TIME CLOCK MODULE (I^2C-Bus)

Built-in 32.768 kHz-DTCXO, +105°C operating temperature,
Low current consumption, Built-in power supply switching circuit and
Time stamp function up to 32 records

RX8901CE

- Built in frequency adjusted 32.768 kHz crystal unit and DTCXO
- Interface Type : I^2C-Bus
- Current consumption : 240 nA / 3 V (Typ.)
- Auto power switching function : Automatically switches to backup power supply by monitoring the V_{DD} / V_{BAT} voltage
- Time stamp function : Maximum 32 time stamps
- Interrupt output : Wake up every hour or every minute or every second
- Alarm interruption : Day, date, hour, minute, second
- Auto repeat wakeup timer interruption
- Self-monitoring interruption : Crystal oscillation stop, V_{BAT} low, V_{DD} low

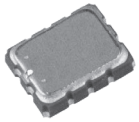

RX8901CE
(3.2 × 2.5 mm, t = 1.0 mm Max.)

Block diagram

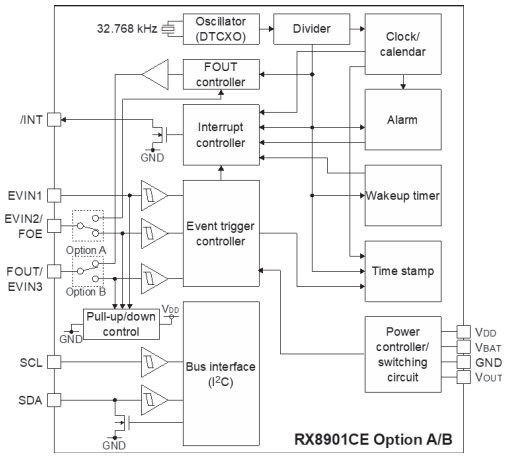

Overview

- Interface type
  I^2C-Bus interface Fast-Mode 400 kHz
- High stability
  XS : ±3.0 x 10^{-6} / -40 ºC to +85 ºC (Monthly rate: ±8 seconds)
  : ±5.0 x 10^{-6} / +85 ºC to +105 ºC (Monthly rate: ±13.2 seconds)
  XB : ±5.0 x 10^{-6} / -40 ºC to +85 ºC (Monthly rate: ±13.2 seconds)
  : ±8.0 x 10^{-6} / +85 ºC to +105 ºC (Monthly rate: ±21 seconds)
- Time stamp function
  Trigger source: External event (EVIN) input, voltage drop/oscillation stop status detected, command input from the host
  Record data: 1/1024 seconds to 1 second, seconds, minutes, hours, days, months, years
  Number of recordable events: Maximum 32 events
- Backup power supply switching function
  The V_{DD} and V_{BAT} voltages are monitored to switch between Normal mode (V_{DD} operation) and Backup mode (V_{BAT} operation).
- Clock output (FOUT)
  Selectable from 32.768 kHz, 1024 Hz and 1 Hz outputs
  Output can be controlled by a register or FOE input (selectable with a register).

Pin Function

Signal Name	I / O	Function
EVIN1,2,3	Input	External event input pins. Detectable even in Backup mode. Pull-up and pull-down is configurable by the resisters
SCL	Input	Serial clock input pin
SDA	Input / Output	Serial data input and output pin
FOUT	Output	Frequency output pin (CMOS). 32.768 kHz (default), 1024 Hz or 1 Hz clock output is selectable. This pin can be switched to the wakeup timer interrupt output (CMOS)
/INT	Output	Interrupt output pin (N-ch. open drain). The wakeup timer, time update, alarm, and/or event detection interrupt signals can be selected to output from this pin. When two or more signals are selected, they are NORed before being output. This pin is effective even in Backup mode.
V_{DD}	-	Power-supply pin
V_{OUT}	-	Internal operating voltage output pin Connect a 1 µF bypass capacitor to this pin
V_{BAT}	-	Backup power supply pin Connect a backup power supply such as a large-size capacitor, secondary battery, or primary battery. The operating power voltage is supplied from this pin to the internal circuits in Backup mode.
GND	-	Ground pin

Terminal connection / External dimensions (Unit: mm)

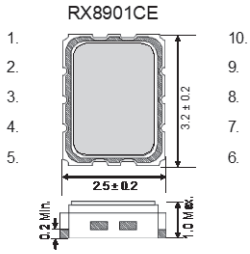

Pin	Connection	
	Option A	Option B
1	V_{DD}	
2	V_{OUT}	
3	V_{BAT}	
4	FOUT	EVIN3
5	SCL	
6	EVIN1	
7	SDA	
8	/INT	
9	GND	
10	EVIN2	

Specifications (characteristics)

∗ Refer to application manual for details

■ Recommended Operating Conditions

Item	Symbol	Condition	Min.	Typ.	Max.	unit
Operating voltage	V_{DD}	-	1.6	3.0	5.5	V
Clock supply voltage	V_{CLK}	-	1.1	3.0	5.5	V
Operating Temperature	Ta	-	-40	+25	+105	ºC
V_{DD} detection voltage	$-V_{DET1}$	V_{DD}, Fall	1.35	1.45	1.55	V

■ Frequency Characteristics

Item	Symbol	Condition		Min.	Typ.	Max.	unit
Frequency tolerance	Δ f / f	XS	Ta = -40 to +85 °C	-3	-	+3	× 10^{-6}
			Ta = -40 to +105 °C	-5	-	+5	
		XB	Ta = -40 to +85 °C	-5	-	+5	
			Ta = -40 to +105 °C	-8	-	+8	
start-up time	t_{STA}	Ta = +25 °C, V_{DD} = 1.6 V ~ 5.5 V		-	0.5	1.0	s

■ Current consumption

Ta = -40 °C to +105 °C

Item	Symbol	Condition	Min.	Typ.	Max.	unit
I_{DD}	I_{BAT}	V_{BAT} = 3.0 V, /INT= Hi-Z, FOUT: Output OFF (Hi-Z), Temperature compensation interval: 2 s, FSEL1= FSEL0 = 1, INIEN = 1, CHGEN = 0, SCL = SDA = L	-	240	1500	nA
	I_{32k}	V_{DD} = 3.0 V, /INT= Hi-Z, FOUT: 32 kHz output, C_L = 0 pF, Temperature compensation interval: 2 s, FSEL1 = FSEL0 = 1, INIEN = 1, CHGEN = 0, SCL = SDA = H	-	1.0	3.0	µA

■ Option

I/F	Option	EVIN pin Number	/INTpin Number	FOUT	Number of time stamps recorded by EVIN pin trigge	
					FIFO Mode	Direct Mode
I^2C	A	2	1	Yes	32 times	22 times
	B	3	1	-	32times	32 times

Product name

RX8901CE XS A0
① ② ③

① Model CE type package 3.2 x 2.5 x 1.0 mm
② Frequency tolerance
XS: ±3.0 x 10^{-6} / -40 ºC to +85 ºC (Monthly rate: ±8 seconds)
±5.0 x 10^{-6} / +85 ºC to +105 ºC (Monthly rate: ±13.2 seconds)
XB: ±5.0 x 10^{-6} / -40 ºC to +85 ºC (Monthly rate: ±13.2 seconds)
±8.0 x 10^{-6} / +85 ºC to +105 ºC (Monthly rate: ±21 seconds)
③ Pin Option
A: Option A
B: Option B

Pb Free
RoHS Compliant

Product Number (2,000 pcs / Reel)
RX4901CE XS A0 : X1B000471000115
RX4901CE XB A0 : X1B000471000215
RX4901CE XS B0 : X1B000471000315
RX4901CE XB B0 : X1B000471000415
RX4901CE XS C0 : X1B000471000515
RX4901CE XB C0 : X1B000471000615
RX4901CE XS D0 : X1B000471000715
RX4901CE XB D0 : X1B000471000815

REAL TIME CLOCK MODULE (SPI-Bus)

Built-in 32.768 kHz-DTCXO, +105°C operating temperature,
Low current consumption, Built-in power supply switching circuit and
Time stamp function up to 32 records

RX4901CE

- Built in frequency adjusted 32.768 kHz crystal unit and DTCXO
- Interface Type : 3 wire / 4 wire SPI-Bus
- Current consumption : 240 nA / 3 V (Typ.)
- Auto power switching function : Automatically switches to backup power supply by monitoring the V_{DD} / V_{BAT} voltage
- Time stamp function : Maximum 32 time stamps
- Interrupt output : Wake up every hour or every minute or every second
- Alarm interruption : Day, date, hour, minute, second
- Auto repeat wakeup timer interruption
- Self-monitoring interruption : Crystal oscillation stop, V_{BAT} low, V_{DD} low

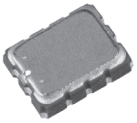

RX4901CE
(3.2 × 2.5 mm, t = 1.0 mm Max.)

Block diagram

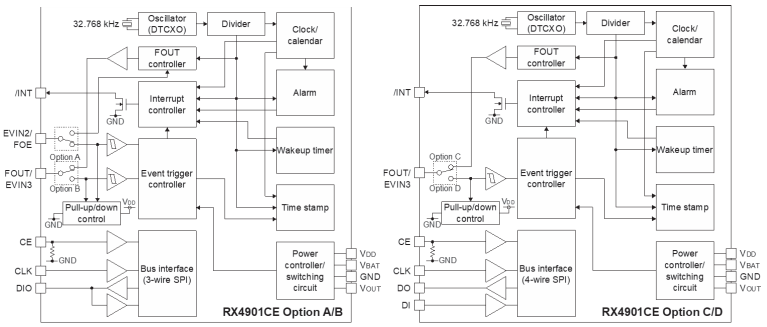

Overview

- Interface type : 3 wire / 4 wire SPI-Bus
- High stability
  XS : ±3.0 x 10^{-6} / -40 ºC to +85 ºC (Monthly rate: ±8 seconds)
  : ±5.0 x 10^{-6} / +85 ºC to +105 ºC (Monthly rate: ±13.2 seconds)
  XB : ±5.0 x 10^{-6} / -40 ºC to +85 ºC (Monthly rate: ±13.2 seconds)
  : ±8.0 x 10^{-6} / +85 ºC to +105 ºC (Monthly rate: ±21 seconds)
- Time stamp function
  Trigger source: External event (EVIN) input, voltage drop/oscillation stop status detected, command input from the host
  Record data: 1/1024 seconds to 1 second, seconds, minutes, hours, days, months, years
  Number of recordable events: Maximum 32 events
- Backup power supply switching function
  The V_{DD} and V_{BAT} voltages are monitored to switch between Normal mode (V_{DD} operation) and Backup mode (V_{BAT} operation).
- Clock output (FOUT)
  Selectable from 32.768 kHz, 1024 Hz and 1 Hz outputs
  Output can be controlled by a register or FOE input (selectable with a register).

Pin Function

Signal Name	I / O	Function
EVIN1,2,3	Input	External event input pins. Detectable even in Backup mode. Pull-up and pull-down is configurable by the resisters
CE	Input	Slave select input pin A pull-down resistor (Typ. 300 kΩ) is included
CLK	Input	Serial clock input pin
DI	Input	Serial data input pin (4 wire)
DO	Output	Serial data Output pin (4 wire)
DIO	Input / Output	Serial data input/output pin (3 wire)
FOUT	Output	Frequency output pin (CMOS). 32.768 kHz (default), 1024 Hz or 1 Hz clock output is selectable. This pin can be switched to the wakeup timer interrupt output (CMOS)
/INT	Output	Interrupt output pin (N-ch. open drain). The wakeup timer, time update, alarm, and/or event detection interrupt signals can be selected to output from this pin. When two or more signals are selected, they are NORed before being output. This pin is effective even in Backup mode.
V_{DD}	-	Power-supply pin
V_{OUT}	-	Internal operating voltage output pin Connect a 1.0 µF bypass capacitor to this pin.
V_{BAT}	-	Backup power supply pin Connect a backup power supply such as a large-size capacitor, secondary battery, or primary battery. The operating power voltage is supplied from this pin to the internal circuits in Backup mode.
GND	-	Ground pin

Terminal connection / External dimensions (Unit: mm)

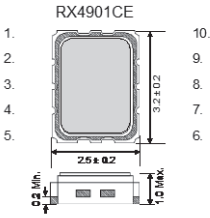

Pin	Connection			
	Opt. A	Opt. B	Opt. C	Opt. D
	3 wire		4 wire	
1	V_{DD}			
2	V_{OUT}			
3	V_{BAT}			
4	FOUT	EVIN3	FOUT	EVIN3
5	CLK			
6	CE			
7	DIO		DO	
8	/INT			
9	GND			
10	EVIN2		DI	

Specifications (characteristics)

＊ Refer to application manual for details

■ Recommended Operating Conditions

Item	Symbol	Condition	Min.	Typ.	Max.	unit
Operating voltage	V_{DD}	-	1.6	3.0	5.5	V
Clock supply voltage	V_{CLK}	-	1.1	3.0	5.5	V
Operating Temperature	Ta	-	-40	+25	+105	ºC
V_{DD} detection voltage	$-V_{DET1}$	V_{DD}, Fall	1.35	1.45	1.55	V

■ Frequency Characteristics

Item	Symbol	Condition		Min.	Typ.	Max.	unit
Frequency tolerance	Δ f / f	XS	Ta = -40 to +85 °C	-3	-	+3	× 10^{-6}
			Ta = -40 to +105 °C	-5	-	+5	
		XB	Ta = -40 to +85 °C	-5	-	+5	
			Ta = -40 to +105 °C	-8	-	+8	
start-up time	t_{STA}	Ta = +25 °C, V_{DD} = 1.6 V ~ 5.5 V		-	0.5	1.0	s

■ Current consumption

Ta = -40 °C to +105 °C

Item	Symbol	Condition	Min.	Typ.	Max.	unit
I_{DD}	I_{BAT}	V_{BAT} = 3.0 V, /INT= Hi-Z, FOUT: Output OFF (Hi-Z), Temperature compensation interval: 2 s, FSEL1= FSEL0 = 1, INIEN = 1, CHGEN = 0, CE = L	-	240	1500	nA
	I_{32k}	V_{DD} = 3.0 V, /INT= Hi-Z, FOUT: 32 kHz output, C_L = 0 pF, Temperature compensation interval: 2 s, FSEL1 = FSEL0 = 0, INIEN = 1, CHGEN = 0, CE = L	-	1.0	3.0	µA

■ Option

I/F	Option	EVIN pin Number	/INTpin Number	FOUT	Number of time stamps recorded by EVIN terminal trigge	
					FIFO Mode	Direct Mode
SPI 3 wire	A	1	1	Yes	32 times	12 times
	B	2	1	-	32 times	22 times
SPI 4 wire	C	0	1	Yes	0 time	0 time
	D	1	1	-	32 times	10 times

Product name

RX4901CE XS A0
① ② ③

① Model CE type package 3.2 x 2.5 x 1.0 mm
② Frequency tolerance
XS: ±3.0 x 10^{-6} / -40 ºC to +85 ºC (Monthly rate: ±8 seconds)
±5.0 x 10^{-6} / +85 ºC to +105 ºC (Monthly rate: ±13.2 seconds)
XB: ±5.0 x 10^{-6} / -40 ºC to +85 ºC (Monthly rate: ±13.2 seconds)
±8.0 x 10^{-6} / +85 ºC to +105 ºC (Monthly rate: ±21 seconds)
③ Pin Option
A: Option A
B: Option B
C: Option C
D: Option D

REAL TIME CLOCK MODULE (I^2C-Bus)

Time stamp function and Low current consumption

RX8111CE

Pb Free
RoHS Compliant

Product Number (2,000 pcs / Reel)
RX8111CE A : X1B000421000115
RX8111CE B : X1B000421000215

- Built in frequency adjusted 32.768 kHz crystal unit
- Interface Type : I^2C -Bus
- Low backup current : 100 nA Typ. / 3 V
- Auto power switching function : Automatically switches to backup power supply by monitoring the V_{DD} voltage
- Time stamp function : 8 times stamped from year to 1/256 seconds
- Interrupt output : Wake up every minute or every second
- Alarm interruption : Day, date, hour, minute, second
- Auto repeat wakeup timer interruption
- Self-monitoring interruption : Crystal oscillation stop, V_{BAT} low, V_{DD} low

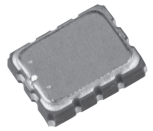

RX8111CE
(3.2 x 2.5 mm, t = 1.0 mm Max.)

Block diagram

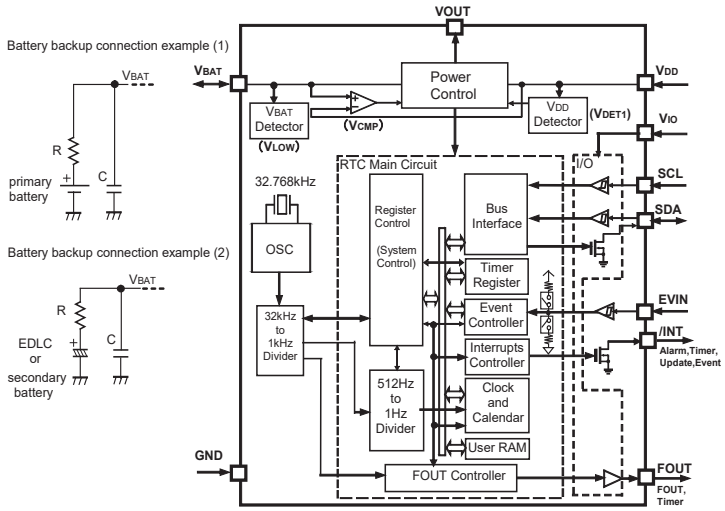

Overview

- Interface type
  I^2C-Bus interface Fast-Mode 400 kHz
- Auto power switch function
  The V_{DD} voltage is monitored and it switches to the backup power supply by the automatic operation
  Backup power supply switching voltage 1.2 V Min.
- Clock output function
  Output frequency is selectable from 32.768 kHz, 1024 Hz, 1 Hz
  When the clock output is not used, the FOUT pin can be used as a timer output pin (CMOS)
- Wakeup timer function
  Selectable from 244 µs to 32 years (24 bit x 1 ch.)
  Timer source clock selectable from 1/60 Hz, 1 Hz, 64 Hz, 4096 Hz
  Auto release after interrupt output from /INT pin at timer completes
  This operation is auto repeat with a selected cycle, it can be used like a watchdog timer
- Time stamp function
  8 times stamped from year to 1/256 seconds
  The time stamp trigger inputs from EVIN pin, self-monitoring and I^2C software command
  EVIN pin has function of chattering-cancel
- Alarm function
  It is possible program from year to second
- Self-monitoring interruption
  Crystal oscillation stop, V_{BAT} low, V_{DD} low

Pin Functin

Signal Name	I / O	Function
EVIN	Input	External event input pin (Pull up/down and polarity are selectable by software)
SCL	Input	Serial clock input pin
SDA	Input / Output	Serial data input and output pin
FOUT	Output	Frequency output pin (CMOS) (frequency selection: 32.768 kHz, 1024 Hz, 1 Hz)
/INT	Output	Interrupts output by Alarm and Timer events (N-ch. open drain)
V_{DD}	–	Power-supply pin Possible to supply different voltage from V_{IO}
V_{IO}	–	Interface power supply pin Input to supply the voltage same as a host
V_{OUT}	–	Internal voltage output pin Connect bypass capacitor of 1.0 µF
V_{BAT}	–	This is a power supply pin for backup battery Connect an EDLC, a secondary battery, a primary battery In the backup voltage range, supplied to IC, from this pin
GND	–	Ground pin

Terminal connection / External dimensions（Unit: mm）

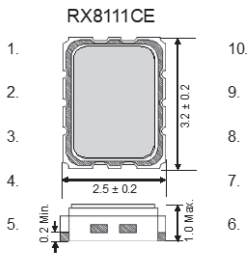

Pin	Connection
1	V_{DD}
2	V_{OUT}
3	V_{BAT}
4	FOUT
5	SCL
6	EVIN
7	SDA
8	V_{IO}
9	GND
10	/INT

Specifications (characteristics)

* Refer to application manual for details

■ Recommended Operating Conditions

Item	Symbol	Conditions	Min.	Typ.	Max.	Unit
Operating supply voltage	V_{DD}	-	1.6	3.0	5.5	V
Clock supply voltage	V_{CLK}	-	1.1	3.0	5.5	V
Operating temperature	T_a	-	-40	+25	+85	°C
V_{DD} detect voltage	$-V_{DET1}$	V_{DD}, Fall	1.20	1.40	1.60	V

■ Frequency characteristics

Item	Grade	Symbol	Conditions	Min.	Typ.	Max.	Unit
Frequency tolerance	A	Δ f / f	T_a = +25 °C V_{DD} = 3.0 V	-11.5	-	+11.5	x 10^{-6}
	B			-23	-	+23	
Oscillation start-up time		t_{STA}	V_{DD} = 2.75 V to 5.5 V	-	0.3	1.0	s

■ Current consumption characteristics

T_a = -40 °C to +85 °C

Item	Symbol	Conditions	Min.	Typ.	Max.	Unit
Current consumption	I_{BAT}	SCL = SDA = " L", FOUT = OFF, /INT = OFF, V_{BAT} = 3.0 V, V_{DD} = V_{IO} = 0.0 V, CHGEN = 0b, INIEN = 0b, SWSEL0 = 1, SWSEL1 = 0	-	100	450	nA
	I_{32k}	FOUT = 32.768 kHz, /INT = OFF, V_{DD} = V_{IO} = 3.0 V, FOUT pin CL = 15 pF	-	2.0	3.0	µA

REAL TIME CLOCK MODULE (SPI-Bus)

Time stamp function and Low current consumption

Pb Free
RoHS Compliant

Product Number (2,000 pcs / Reel)
RX4111CE A : X1B000431000115
RX4111CE B : X1B000431000215

RX4111CE

- Built in frequency adjusted 32.768 kHz crystal unit
- Interface Type : SPI -Bus 4 wire
- Low backup current : 100 nA Typ. / 3 V
- Auto power switching function : Automatically switches to backup power supply by monitoring the V_{DD} voltage.
- Time stamp function : 8 times stamped from year to 1/256 seconds
- Interrupt output : Wake up every minute or every second
- Alarm interruption : Day, date, hour, minute, second
- Auto repeat wakeup timer interruption
- Self-monitoring interruption : Crystal oscillation stop, V_{BAT} low, V_{DD} low

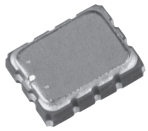

RX4111CE
(3.2 x 2.5 mm, t = 1.0 mm Max.)

Block diagram

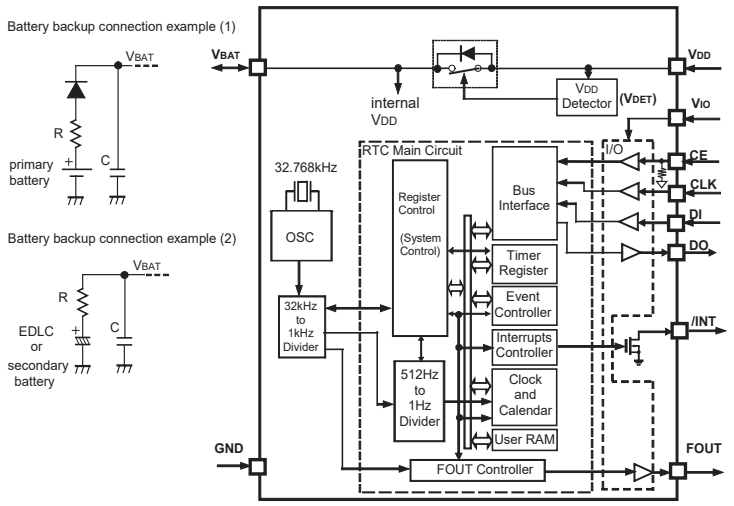

Overview

- Interface type
  SPI-Bus interface (4 wire, 4 MHz Max.)
- Auto power switch function
  The V_{DD} voltage is monitored and it switches to the backup power supply by the automatic operation
  Backup power supply switching voltage 1.2V Min.
- Clock output function
  Output frequency is selectable from 32.768 kHz, 1024 Hz, 1 Hz
  When the clock output is not used, the FOUT pin can be used as a timer output pin (CMOS)
- Wakeup timer function
  Selectable from 244 µs to 32 years (24 bit x 1 ch.)
  Timer source clock selectable from 1/60 Hz, 1 Hz, 64 Hz, 4096 Hz
  Auto release after interrupt output from /INT pin at timer completes
  This operation is auto repeat with a selected cycle, it can be used like a watchdog timer
- Time stamp function
  8 times stamped from year to 1/256 seconds
  The time stamp trigger inputs from self-monitoring and SPI command
- Alarm function
  It is possible program from year to second
- Self-monitoring interruption
  Crystal oscillation stop, V_{BAT} low, V_{DD} low

Pin Functin

Signal Name	I / O	Function
CE	Input	Chip enables input pin
CLK	Input	Serial clock input pin
DI	Input	Serial data input pin
DO	Output	Serial data output pin
FOUT	Output	Frequency output (CMOS) (frequency selection: 32.768 kHz, 1024 Hz, 1 Hz)
/INT	Output	Interrupts output by Alarm and Timer events (N-ch. open drain)
V_{DD}	–	Power supply pin Possible to supply different voltage from V_{IO}
V_{IO}	–	Interface power supply pin Input to supply the voltage same as a host
V_{BAT}	–	Power supply pin for backup battery Connect an EDLC, a secondary battery, a primary battery In the backup voltage range, supplied to IC, from this pin
GND	–	Ground pin

Terminal connection / External dimensions（Unit: mm）

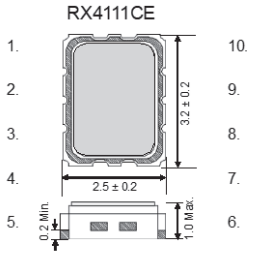

Pin	Connection
1	V_{DD}
2	V_{BAT}
3	DI
4	FOUT
5	CLK
6	DO
7	CE
8	V_{IO}
9	GND
10	/INT

Specifications (characteristics)

* Refer to application manual for details

■ Recommended Operating Conditions

Item	Symbol	Conditions	Min.	Typ.	Max.	Unit
Operating supply voltage	V_{DD}	-	1.6	3.0	5.5	V
Clock supply voltage	V_{CLK}	-	1.1	3.0	5.5	V
Operating temperature	T_a	-	-40	+25	+85	°C
V_{DD} detect voltage	$-V_{DET1}$	V_{DD}, Fall	1.20	1.40	1.60	V

■ Frequency characteristics

Item	Grade	Symbol	Conditions	Min.	Typ.	Max.	Unit
Frequency tolerance	A	Δ f / f	T_a = +25 °C V_{DD} = 3.0 V	-11.5	-	+11.5	x 10^{-6}
	B			-23	-	+23	
Oscillation start-up time		t_{STA}	V_{DD} = 2.75 V to 5.5 V	-	0.3	1.0	s

■ Current consumption characteristics

T_a = -40 °C to +85 °C

Item	Symbol	Conditions	Min.	Typ.	Max.	Unit
Current consumption	I_{BAT}	Input pins = "L", FOUT = OFF, /INT = OFF, V_{BAT} = 3.0 V, V_{DD} = V_{IO} = 0.0 V, CHGEN = 0b, INIEN = 0b, SWSEL0 = 1, SWSEL1 = 0	-	100	450	nA
	I_{32k}	Input pins = "L", FOUT = 32.768 kHz, /INT = OFF, V_{DD} = V_{IO} = 3.0 V, FOUT pin CL = 15 pF, CHGEN = 0b, INIEN = 1b	-	2.0	3.0	µA

REAL TIME CLOCK MODULE (I²C-Bus)

Built-in 32.768 kHz DTCXO, High Stability

Pb Free
RoHS Compliant

Product Number (2,000 pcs / Reel)
RX8804CE XA: X1B000371000100
RX8804CE XB: X1B000371000200

RX8804CE

- Built-in frequency adjusted 32.768 kHz crystal unit and DTCXO
- Interface Type : I²C-Bus
- Selectable clock output : 32.768 kHz, 1024 Hz, 1 Hz
- Time stamp function : 1 time stamped from year to second
- Interrupt output : Wake up every minute or every second
- Alarm interruption : Day, date, hour, minute
- Auto repeat wakeup timer interruption
- Self-monitoring interruption : Crystal oscillation stop, V_{BAT} low, V_{DD} low
- SOUT pin outputs that selected flag bit value

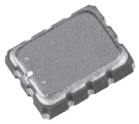

RX8804CE
(3.2 × 2.5 mm, t = 1.0 mm Max.)

Block diagram

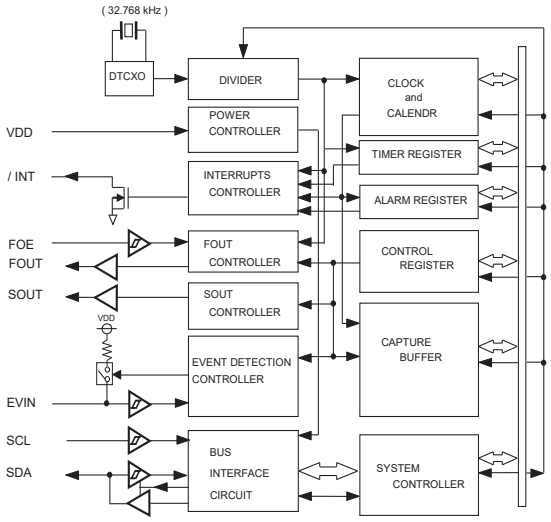

Overview

- Interface type
  I²C-Bus interface Fast-Mode 400 kHz
- High stability
  XA: ± 3.4 x 10^{-6} / -40 ºC to +85 ºC (equivalent to ±9 s of mo. deviation)
  ± 8.0 x 10^{-6} / +85 ºC to +105 ºC (equivalent to ±21 s of mo. deviation)
  XB: ± 5.0 x 10^{-6} / -40 ºC to +85 ºC (equivalent to ±13 s of mo. deviation)
  ± 8.0 x 10^{-6} / +85 ºC to +105 ºC (equivalent to ±21 s of mo. deviation)
- Clock output function
  Output frequency is selectable from 32.768 kHz, 1024 Hz, 1 Hz
- Wakeup timer function
  Selectable from 244 µs to 32 years (24 bit x 1 ch.)
  Timer source clock selectable from 1/60 Hz, 1 Hz, 64 Hz, 4096 Hz
  Auto release after interrupt output from /INT pin at timer completes
  This operation is auto repeat with a selected cycle, it can be used like a watchdog timer
- Time stamp function
  1 time stamped from year to second
  The time stamp trigger inputs from EVIN pin, self-monitoring and I²C software command
  EVIN pin has function of chattering-cancel
- Alarm function
  It is possible program from day to minute
- Internal state output function
  SOUT pin outputs selected flag-bit value or specified value (H or L)

Pin Function

Signal Name	I / O	Function
SOUT	Output	Internal state output pin
SCL	Input	Serial clock input pin
FOUT	Output	Frequency output pin (CMOS) (frequency selection: 32.768 kHz, 1024 Hz, 1 Hz)
EVIN	Input	Event input pin
V_{DD}	-	Power-supply pin
FOE	Input	The FOUT output control pin
/INT	Output	Interrupts output by Alarm and Timer events (N-ch. open drain)
GND	-	Ground pin
T2	-	Test pin in the factory (Do not connect externally)
SDA	Input / Output	Serial data input and output pin.

Terminal connection / External dimensions (Unit: mm)

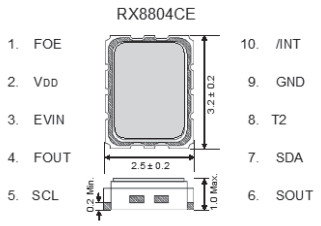

Specifications (characteristics)

∗ Refer to application manual for details

■ Electrical Characteristics

Item	Symbol	Conditions			Min.	Typ.	Max.	Unit
Operating voltage	V_{DD}	-			1.6	3.0	5.5	V
Temp. compensated Voltage	V_{TEM}	-			1.5	3.0	5.5	V
Clock supply voltage	V_{CLK}	-			1.5	3.0	5.5	V
Operating temperature	T_a	-			-40	+25	+105	ºC
Stability	Δ f / f	XA	T_a = -40 ºC to +85 ºC		±3.4			x 10^{-6}
			T_a = +85 ºC to +105 ºC		±8.0			
		XB	T_a = -40 ºC to +85 ºC		±5.0			
			T_a = +85 ºC to +105 ºC		±8.0			
Current consumption (1)	I_{DD1}	fSCL = 0 Hz, /INT = V_{DD}, FOE = GND, FOUT: OFF, Temp. Compensation interval 2.0 s		V_{DD} = 5 V	-	0.4	1.6	µA
Current consumption (2)	I_{DD2}			V_{DD} = 3 V	-	0.35	1.5	

■ 32.768 kHz DTCXO Frequency temperature characteristics (Example)

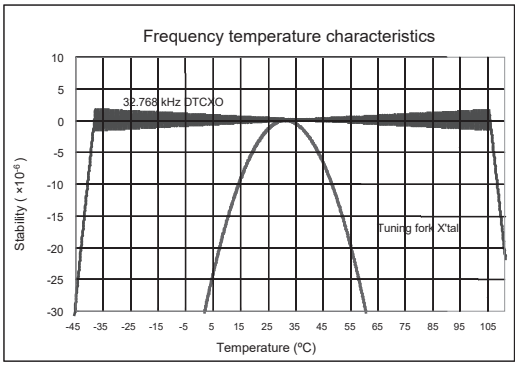

REAL TIME CLOCK MODULE (I^2C-Bus)

Built-in backup battery charge control function

Product Number (2,000 pcs / Reel)
RX8130CE: X1B000311000100

RX8130CE

- Built-in frequency adjusted 32.768 kHz crystal unit
- Interface Type : I^2C-Bus
- Low backup current : 300 nA Typ. / 3 V
- Auto power switching function : Automatically switches to backup power supply by monitoring the V_{DD} voltage
- Backup battery charge control function : For the rechargeable battery
- Reset functions with a delay : Detect a main power supply and remove the reset
- Interrupt output : Wake up every minute or every second
- Alarm interruption : Day, date, hour, minute, second
- Auto repeat wakeup timer interruption
- Self-monitoring interruption : Crystal oscillation stop, V_{BAT} low, V_{DD} low

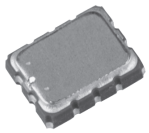

RX8130CE
(3.2 x 2.5 mm, t = 1.0 mm Max.)

Block diagram

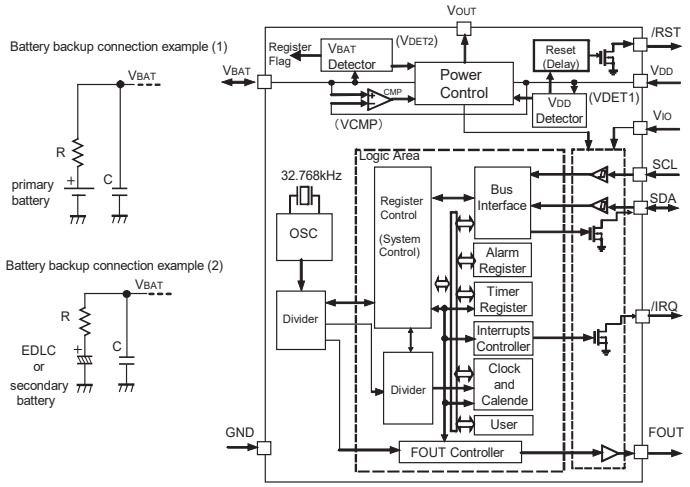

Overview

- Interface type
  I^2C-Bus interface Fast-Mode 400 kHz
- Auto power switch function
  The V_{DD} voltage is monitored and it switches to the backup power supply by the automatic operation
  Backup power supply switching voltage 1.2V Min.
- Clock output function
  Output frequency is selectable from 32.768 kHz, 1024 Hz, 1 Hz
- Wakeup timer function
  Selectable from 244 µs to 7.5 years (16 bit x 1 ch.)
  Timer source clock selectable from 1/3600 Hz, 1/60 Hz, 1 Hz, 64 Hz, 4096 Hz. Auto release after interrupt output from /IRQ pin at timer completes
  This operation is auto repeat with a selected cycle, it can be used like a watchdog timer
- Backup battery charge control function
  Stop charging automatically by detecting the full charge.
  Records in the register detecting the backup power supply Voltage decrease
- Reset function with a delay
  When the main power is supplied, reset output is released.
  The reset/release voltage is selected by the register (2 types)
  Delay time of release from backup mode is 60ms Min.

Pin Functin

Signal Name	I / O	Function
SCL	Input	Serial clock input pin
SDA	Input / Output	Serial data input and output pin
FOUT	Output	Frequency output pin (CMOS) (frequency selection: 32.768 kHz, 1024 Hz, 1 Hz)
/RST	Output	Reset output pin (N-ch. open drain) In case of V_{DD} voltage drop detection, a reset signal is outputted In case of V_{DD} voltage rise detection, a released reset signal is outputted
/IRQ	Output	Interrupts output by Alarm and Timer events (N-ch. open drain)
V_{DD}	–	Power-supply pin Possible to supply different voltage from V_{IO}
V_{IO}	–	Interface power supply pin Input to supply the voltage same as a host
V_{OUT}	–	Internal voltage output pin Connect bypass capacitor of 1.0 µF
V_{BAT}	–	This is a power supply pin for backup battery Connect an EDLC, a secondary battery, a primary battery In the backup voltage range, supplied to IC, from this pin
GND	–	Ground pin

Terminal connection / External dimensions (Unit: mm)

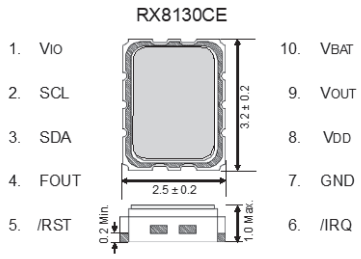

Specifications (characteristics)

* Refer to application manual for details

■ Recommended Operating Conditions

Item	Symbol	Condition	Min.	Typ.	Max.	Unit
Operating supply voltage	V_{DD}	–	1.25	3.0	5.5	V
Clock supply voltage	V_{CLK}	–	1.1	3.0	5.5	V
Operating temperature	Ta	–	-40	+25	+85	°C
V_{DD} detect voltage	$-V_{DET2}$	V_{DD}, Fall	1.20	1.30	1.40	V

■ Frequency characteristics

Item	Symbol	Condition	Rating	Unit
Frequency tolerance	Δ f / f	Ta = +25 °C V_{DD} = 3.0 V	B: 5 ± 23	x 10^{-6}
Oscillation start-up time	t_{STA}	V_{DD} = 2.75 V to 5.5 V	1 Max.	s

■ Current consumption characteristics

Ta = -40 °C to +85 °C

Item	Symbol	Conditions	Min.	Typ.	Max.	Unit
Current consumption	I_{BAT}	SCL = SDA = "L", V_{BAT} = 3.0 V, V_{DD} = V_{IO} = 0.0 V	-	300	500	nA
	I_{32k}	SCL = SDA = "H", FOUT = 32.768 kHz, /IRQ=OFF, V_{DD} = V_{IO} = 3.0 V, FOUT pin CL = 15 pF, CHGEN = L or V_{BAT} ≧ VDET3	-	3.5	4.0	µA

REAL TIME CLOCK MODULE (I^2C-Bus)

Built-in 32.768 kHz DTCXO, High Stability,
Power switching

RX8900SA / RX8900CE

Pb Free
RoHS Compliant

Product Number
1,000 pcs / Reel
RX8900SA UA: X1B000292000100
RX8900SA UB: X1B000292000200
RX8900SA UC: X1B000292000300
2,000 pcs / Reel
RX8900CE UA: X1B000301000100
RX8900CE UB: X1B000301000200
RX8900CE UC: X1B000301000300

- Built-in frequency adjusted 32.768 kHz crystal unit and DTCXO
- Interface Type : I^2C-Bus
- Interface voltage range : 2.5 V to 5.5 V
- Temp. compensated voltage range : 2.0 V to 5.5 V
- Timekeeping voltage range : 1.6 V to 5.5 V
- Auto power switching function : Automatically switches to backup power supply by monitoring the V_{DD} voltage
- Interrupt output : Wake up every minute or every second
- Alarm interruption : Day, date, hour, minute
- Auto repeat wakeup timer interruption

RX8900SA

RX8900CE

(10.1 x 7.4 mm, t = 3.3 mm Max.) (3.2 x 2.5 mm, t = 1.0 mm Max.)

Block diagram

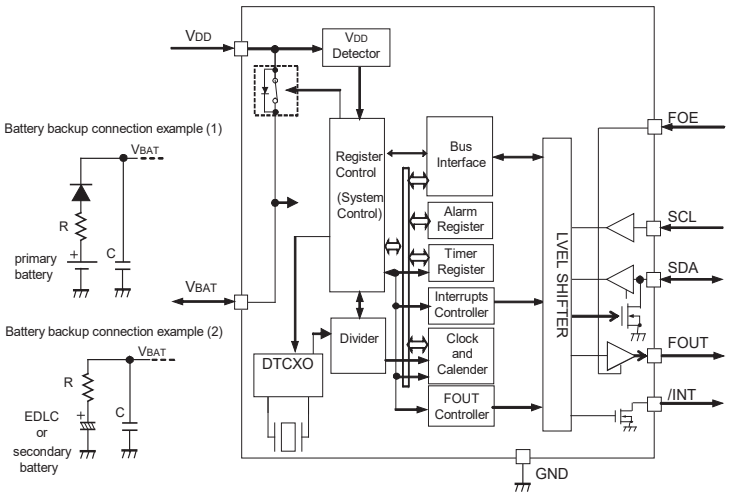

Overview

- Interface type
  I^2C-Bus interface Fast-Mode 400 kHz
- High stability
  UA: ± 3.4 x 10^{-6} / -40 ºC to +85 ºC (equiv. to ±9 s of mo. deviation)
  UB: ± 5.0 x 10^{-6} / -40 ºC to +85 ºC (equiv. to ±13 s of mo. deviation)
  UC: ± 5.0 x 10^{-6} / -30 ºC to +70 ºC (equiv. to ±13 s of mo. deviation)
- Auto power switch function
  The V_{DD} voltage is monitored and it switches to the backup power supply by the automatic operation
  Backup power supply switching voltage 1.9 V Min.
- Clock output function
  Output frequency is selectable from 32.768 kHz, 1024 Hz, 1 Hz
- Wakeup timer function
  Selectable from 244 µs to 2.8 days (12 bit x 1 ch.)
  Timer source clock selectable from 1/60 Hz, 1 Hz, 64 Hz, 4096 Hz
  Auto release after interrupt output from /INT pin at timer completes
  This operation is auto repeat with a selected cycle, it can be used like a watchdog timer
- Alarm function
  It is possible program from day to minute
- Temp. sensor function
  Available readout temperature data from embedded temp sensor

Pin Function

Signal Name	I / O	Function
T1	-	Test pin in the factory (Do not connect externally)
SCL	Input	Serial clock input pin
FOUT	Output	Frequency output pin (CMOS) (frequency selection: 32.768 kHz, 1024 Hz, 1 Hz)
V_{BAT}	-	This is a power supply pin for backup battery Connect an EDLC, a secondary battery, a primary battery. In the backup voltage range, supplied to IC, from this pin
V_{DD}	-	Power-supply pin
FOE	Input	The FOUT output control pin
/INT	Output	Interrupt output (N-ch. open drain).
GND	-	Ground pin
T2	-	Test pin in the factory (Do not connect externally)
SDA	Input / Output	Serial data input and output pin

Terminal connection / External dimensions (Unit: mm)

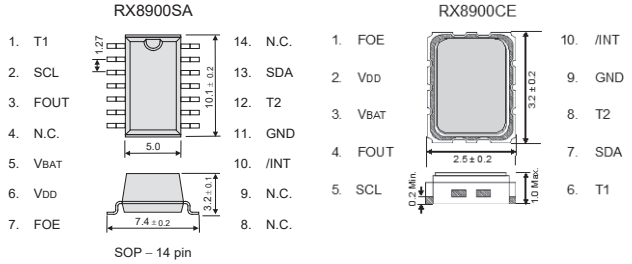

The metal case inside of the molding compound may be exposed on the top or bottom of this product.
This purely cosmetic and does not have any effect on quality, reliability or electrical specs

Specifications (characteristics)

∗ Refer to application manual for details

■ Electrical Characteristics

Item	Symbol	Conditions			Min.	Typ.	Max.	Unit
Operating voltage	V_{DD}	-			2.5	3.0	5.5	V
Temp. compensated Voltage	V_{TEM}	-			2.0	3.0	5.5	V
Clock supply voltage	V_{CLK}	-			1.6	3.0	5.5	V
V_{DD} detect voltage (3)	V_{DET3}	-			2.3	2.4	2.5	V
Operating temperature	T_a	-			-40	+25	+85	ºC
Stability	Δ f / f	UA	T_a = -40 ºC to +85 ºC		±3.4			x 10^{-6}
		UB	T_a = -40 ºC to +85 ºC		±5.0			
		UC	T_a = -30 ºC to +70 ºC					
Current consumption (1)	I_{DD1}	fSCL = 0 Hz, /INT = V_{DD}, FOE = GND, V_{DD} = V_{BAT}, FOUT: OFF, Temp. Compensation interval 2.0 s		V_{DD} = 5 V	-	0.72	1.5	µA
Current consumption (2)	I_{DD2}			V_{DD} = 3 V	-	0.70	1.4	

■ 32.768 kHz-DTCXO Frequency temperature characteristics (Example)

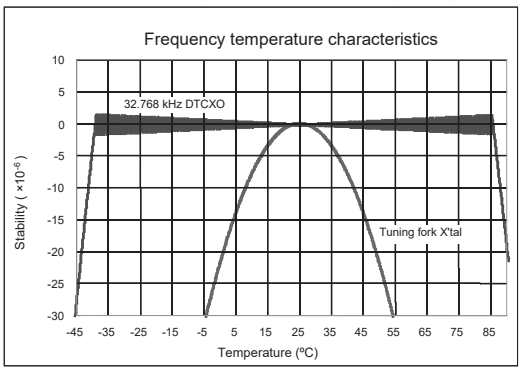

REAL TIME CLOCK MODULE (I²C-Bus)

Built-in 32.768 kHz-DTCXO, High Stability

RX-8803SA / LC

- Built in frequency adjusted 32.768 kHz crystal unit and DTCXO.
- 1/100s resolution Time register
- Interface Type : I²C-Bus interface (400kHz)
- Interface voltage range : 1.6 V to 5.5 V
- Temp. compensated voltage range : 2.2 V to 5.5 V
- Clock supply voltage range : 1.6 V to 5.5 V
- Selectable clock output (32.768 kHz, 1024 Hz, 1 Hz)
- The various functions include full calendar, alarm, timer, EVIN input.

Epson prepared Linux driver for development.
(http://www5.epsondevice.com/en/information/support/linux_rtc/)
The registered trademark Linux® is used pursuant to a sublicense from LMI(Linux Mark Institute)

Product Number
RX-8803SA UB : X1B000151000100
RX-8803SA UA : X1B000151000200
RX-8803SA UC : X1B000151000300
RX-8803SA AA : X1B000151000400
RX-8803LC UA : X1B000142000100
RX-8803LC UB : X1B000142000200
RX-8803LC UC : X1B000142000300
RX-8803LC AA : X1B000142000400

RX-8803SA

RX-8803LC

Block diagram

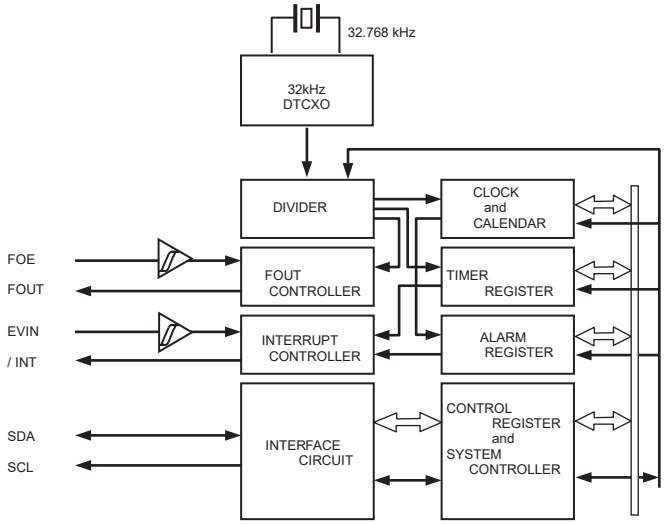

Overview

- **High Stability**
  - UA ± 3.4 x 10^{-6} / -40 ºC to +85 ºC
    (Equivalent to ±9 seconds of month deviation)
  - UB ± 5.0 x 10^{-6} / -40 ºC to +85 ºC
    (Equivalent to ±13 seconds of month deviation)
  - UC ± 5.0 x 10^{-6} / -30 ºC to +70 ºC
  - AA (+5 ± 5.0) x 10^{-6} / +25 ºC
- **High Resolution:** 1/100s Time register with capture buffer
- **32.768 kHz frequency output function**
  - FOUT pin output (C-MOS output), CL=30 pF
  - Output selectable: 32.768 kHz, 1024 Hz, 1 Hz
- **The various interrupt**
  - Timer Function can be set between 1/ 4096 second and 4095 minutes.
  - Alarm Function can be set to day of week, day, hour, or minute.
  - EVIN input.
- **Time synchronize function with 1PPS signal input**
- **Register compatibility:** upper compatible with RX-8801.

*It is possible to use it by the terminal connection as 32.768 kHz-DTCXO.

Pin Function

Signal Name	I / O	Function
T1(CE)	input	Use by the manufacture for testing. (Do not connect externally.)
SCL	input	Serial clock input pin.
FOUT	Output	The pin outputs the reference clock signal. (CMOS output)
TEST	input	Use by the manufacture for testing. (Do not connect externally. RX-8803SA only.)
VDD	-	Connected to a positive power supply
FOE	input	The input pin for the FOUT output control.
EVIN	input	External event input.
/ INT	Output	Interrupt output (N-ch. open drain).
GND	-	Connected to a ground
T2(VPP)	-	Use by the manufacture for testing. (Do not connect externally.)
SDA	I/O	Data input and output pin.

When it is replaced to RX8803SA from RX8801SA, please do not make open state of 9pin.

Terminal connection / External dimensions (Unit:mm)

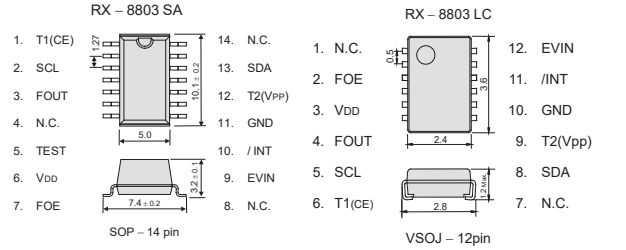

The metal case inside of the molding compound may be exposed on the top or bottom of this product. This purely cosmetic and does not have any effect on quality, reliability or electrical specs.

Prohibition of use of glue after a mount of a product
LC package product cannot use glue and resin coating.
When such a processing is necessary, please examine a CE package product.

Specifications (characteristics)

* Refer to application manual for details.

■ Electrical Characteristics

Item	Symbol	Conditions		Min.	Typ.	Max.	Unit
Operating voltage	VDD	Interface voltage		1.6	3.0	5.5	V
Temp. compensated Voltage	VTEM	Temp. compensated voltage		2.2	3.0	5.5	V
Clock supply voltage	VCLK	-		1.6	3.0	5.5	V
Operating temperature	TOPR	-		-40	+25	+85	ºC
Stability	Δ f / f	UA	Ta = -40 ºC to +85 ºC	±3.4 *1			× 10^{-6}
		UB	Ta = -40 ºC to +85 ºC	±5.0 *2			
		UC	Ta = -30 ºC to +70 ºC				
		AA	Ta = +25 ºC	5 ±5.0 *3			
Current consumption (1)	IDD1	Backup Mode FOE = GND, /INT = VDD FOUT output : OFF	VDD = 5V	-	0.75	3.4	μA
Current consumption (2)	IDD2		VDD = 3V	-	0.75	2.1	

*1) Equivalent to ±9 seconds of month deviation. *2) Equivalent to ±13 seconds of month deviation.
*3) Equivalent to ±13 seconds of month deviation. (excluding offset)

■ 32.768 kHz-DTCXO Frequency temperature characteristics (Example)

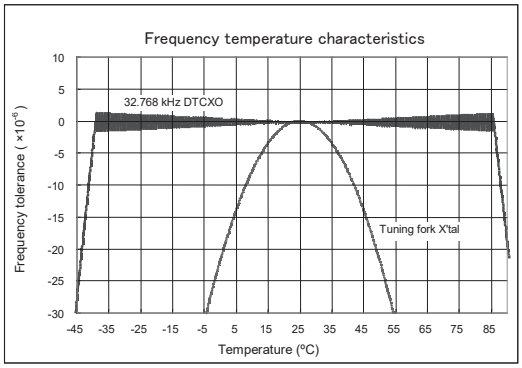

REAL TIME CLOCK MODULE (SPI-Bus)

Built-in 32.768 kHz-DTCXO, High Stability

RX-4803SA / LC

Product Number
RX-4803SA : X1B000131xxxx00
RX-4803LC : X1B000122xxxx00
RX-4803LC UB : X1B000122000200

RX-4803SA

RX-4803LC

- Built in frequency adjusted 32.768 kHz crystal unit and DTCXO.
- 1/100s resolution Time register
- Interface Type : 4-wire serial interface
- Interface voltage range : 1.6 V to 5.5 V
- Temp. compensated voltage range : 2.2 V to 5.5 V
- Clock supply voltage range : 1.6 V to 5.5 V
- Selectable clock output (32.768 kHz, 1024 Hz, 1 Hz)
- The various functions include full calendar, alarm, timer, EVIN input.
  Epson prepared Linux driver for development.
  (http://www5.epsondevice.com/en/information/support/linux_rtc/)

The registered trademark Linux® is used pursuant to a sublicense from LMI(Linux Mark Institute)

Block diagram

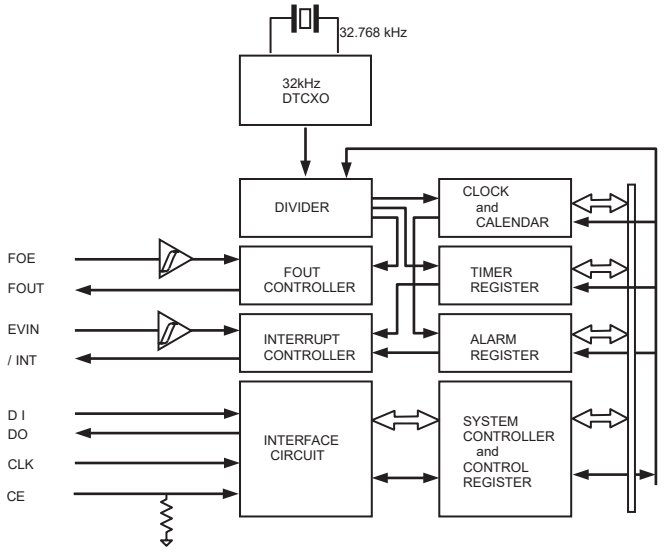

Overview

- **High Stability**
  - UA ± 3.4 x 10^{-6} / -40 ºC to +85 ºC
    (Equivalent to ±9 seconds of month deviation)
  - UB ± 5.0 x 10^{-6} / -40 ºC to +85 ºC
    (Equivalent to ±13 seconds of month deviation)
  - UC ± 5.0 x 10^{-6} / -30 ºC to +70 ºC
  - AA (+5 ± 5.0) x 10^{-6} / +25 ºC
- **High Resolution:** 1/100s Time register with capture buffer
- **32.768 kHz frequency output function**
  - FOUT pin output (C-MOS output), CL=30 pF
  - Output selectable: 32.768 kHz, 1024 Hz, 1 Hz
- **The various interrupt**
  - Timer Function can be set between 1/ 4096 second and 4095 minutes.
  - Alarm Function can be set to day of week, day, hour, or minute.
  - EVIN input.
- **Time synchronize function with 1PPS signal input**
- **Register compatibility:** upper compatible with RX-4801.

*It is possible to use it by the terminal connection as 32.768 kHz-DTCXO.

Pin Function

Signal Name	I / O	Function
CE	input	The chip enable input pin.
CLK	input	The shift clock input pin for serial data transfer.
FOUT	Output	The pin outputs the reference clock signal. (CMOS output)
TEST	input	Use by the manufacture for testing. (Do not connect externally. RX-4803SA only.)
VDD	-	Connected to a positive power supply
FOE	input	The input pin for the FOUT output control.
EVIN	input	External event input. Open is prohibited
/ INT	Output	Interrupt output (N-ch. open drain).
GND	-	Connected to a ground
T2(VPP)	-	Use by the manufacture for testing. (Do not connect externally.)
DO	Output	The data output pin for serial data transfer.
D I	input	The data input pin for serial data transfer.

When it is replaced to 4803SA from 4801SA, please do not make open state of 9pin.

Terminal connection / External dimensions (Unit:mm)

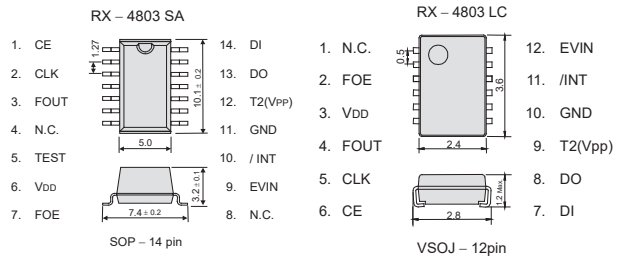

The metal case inside of the molding compound may be exposed on the top or bottom of this product. This purely cosmetic and does not have any effect on quality, reliability or electrical specs.

Prohibition of use of glue after a mount of a product
An LC package product cannot use glue and resin coating.
When such a processing is necessary, please examine a CE package product.

Specifications (characteristics)

* Refer to application manual for details.

■ Electrical Characteristics

Item	Symbol	Conditions		Min.	Typ.	Max.	Unit
Interface voltage	VDD	Interface voltage		1.6	3.0	5.5	V
Temp. compensated Voltage	VTEM	Temp. compensated voltage		2.2	3.0	5.5	V
Clock supply voltage	VCLK	-		1.6	3.0	5.5	V
Operating temperature	TOPR	No condensation		-40	+25	+85	ºC
Stability	Δ f / f	UA	Ta = -40 ºC to +85 ºC	±3.4 *1			× 10^{-6}
		UB	Ta = -40 ºC to +85 ºC	±5.0 *2			
		UC	Ta = -30 ºC to +70 ºC				
		AA	Ta = +25 ºC	5 ± 5.0*3			
Current consumption (1)	IDD1	Backup Mode FOE = GND, /INT = VDD FOUT output : OFF	VDD = 5V	-	0.75	3.4	μA
Current consumption (2)	IDD2		VDD = 3V	-	0.75	2.1	

*1) Equivalent to ±9 seconds of month deviation. *2) Equivalent to ±13 seconds of month deviation.
*3) Equivalent to ±13 seconds of month deviation. (excluding offset)

■ 32.768 kHz-DTCXO Frequency temperature characteristics (Example)

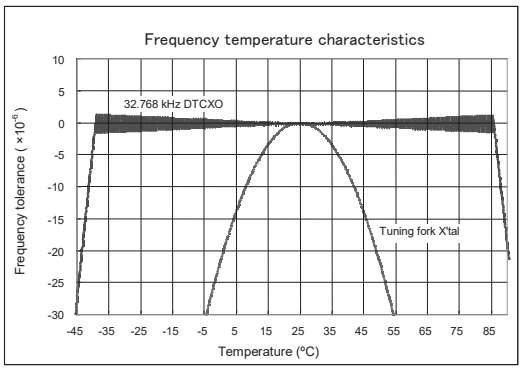

REAL TIME CLOCK MODULE (I^2C-Bus)

High-Stability Frequency with Built in Timestamp and Power Switching

RX-8035SA / LC

- Built-in 32.768 kHz crystal unit : Frequency adjusted for high accuracy. (± 5 ×10^{-6} / Ta = +25 °C)
- Interface Type : I^2C-Bus Interface (400kHz .
- Operating voltage range : 2.4 V to 5.5 V
- Wide voltage for Timekeeping. : 1.0 V to 5.5 V
- Low backup current : 350 nA (SA) 400 nA (LC) / 3 V (Typ.)
- Event detection and Time stamp : One-shot full timestamp and interrupt.
- Dual event detection ports : Each terminal has a de-bounce circuit.
- Auto power switching functions : It switches VDD and VBAT, automatically.
- Dual Alarm, Periodic interruption.

Epson prepared Linux driver for development.
(http://www5.epsondevice.com/en/information/support/linux_rtc/)
The registered trademark Linux® is used pursuant to a sublicense from LMI(Linux Mark Institute)

RoHS Compliant

Product Number
RX-8035SA B : X1B000172000100
RX-8035SA AC : X1B000172000200
RX-8035SA AA : X1B000172000300
RX-8035LC B : X1B000182000100
RX-8035LC AC : X1B000182000200
RX-8035LC AA : X1B000182000300

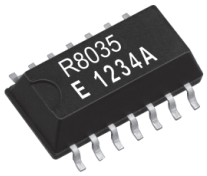

RX-8035SA

RX-8035LC

Block diagram

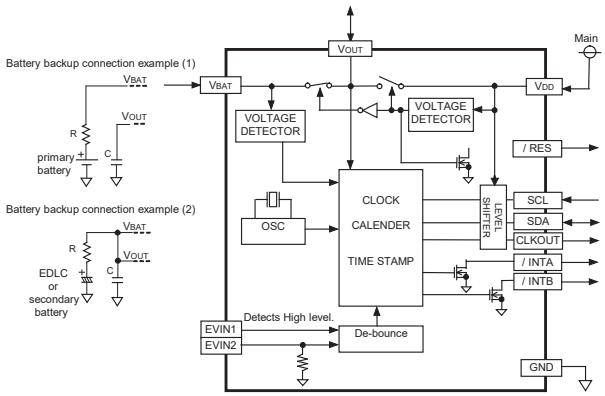

Overview

- **The event detection and Timestamp function**
  Dual event detection terminals.
  Selectable de-bounce time 35ms or 2s.
  Available event detection interrupt output.
- **Power switching functions.**
  - An external diode is unnecessary to have a reverse current prevention switch built-in in the VBAT side to connect a primary cell to.
  - When VDD is less than 2.4V, an internal source is switched to VBAT, and /RES is Low level. When VDD voltage rises to higher than 2.52V, an internal source is switched to VDD, and /RES is released with 105ms delay.
  - Note: When the supply from VBAT, SCL and SDA are disabled.
- **Alarm, Periodic interrupt, 32.768kHz clock output.**
  - Available monthly-alarm and weekly- Dual alarm.
  - Interrupt period are selectable from 2Hz to Monthly.
  - CLKOUT outputs 32.768kHz, it powered from VDD.

Pin function

Signal Name	Input / Output	Function
SCL	Input	I^2C serial clock.
SDA	In/Out	I^2C data in/out.
VDD	—	Main power supply.
VBAT	—	Power supply for backup.
Vout	Output	Switched power out. (maximum output current 20mA)
/ RES	Output	VDD voltage state.
GND	—	Ground
EVIN1	Input	Event detection input 1
EVIN2	Input	Event detection input 2
/ INTA	Output	Interrupt out A.
/ INTB	Output	Interrupt out B.
CLKOUT	Output	32.768kHz output. (CMOS. Can not inhibit.)
N.C.	—	Do not connect.

Terminal connection / External dimensions (Unit:mm)

RX – 8035 SA

1. N.C.
2. SCL
3. CLKOUT
4. VBAT
5. N.C.
6. VDD
7. Vout
14. EVIN2
13. / INTB
12. SDA
11. GND
10. / INTA
9. / RES
8. EVIN1

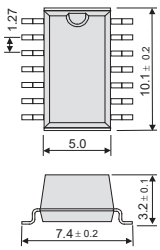

SOP – 14 pin

RX – 8035 LC

1. Vout
2. VDD
3. N.C.
4. VBAT
5. CLKOUT
6. SCL
12. EVIN1
11. / RES
10. / INTA
9. GND
8. SDA
7. / INTB

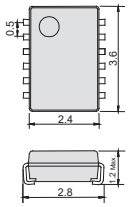

VSOJ – 12pin

The metal case inside of the molding compound may be exposed on the top or bottom of this product.
This purely cosmetic and does not have any effect on quality, reliability or electrical specs.

Prohibition of use of glue after a mount of a product
An LC package product cannot use glue and resin coating.
When such a processing is necessary, please examine a CE package product.

Specifications (characteristics)

*** Refer to application manual for details.**

Recommended Operating Conditions

Item	Symbol	Conditions	Min.	Typ.	Max.	Unit
Operating voltage	VACCESS	VDD	2.4	3.0	5.5	V
Time keeping voltage	VCLK	VBAT	1.0	3.0	5.5	V
Operating temperature	TOPR	—	-40	+25	+85	°C
Storage temperature	TSTG	—	-55	—	+125	°C

Frequency characteristics

Item	Symbol	Conditions	Rating	Unit
Frequency tolerance	Δ f / f	Ta = +25°C VBAT = 3.0 V	B: 5 ± 23 *1) AA: 5 ± 5 *2) AC: 0 ± 5 *2)	× 10^{-6}
Oscillation start-up time	tSTA	Ta = +25 °C VDD = 3.0 V	1 Max.	s
Frequency / voltage characteristics	f / V	Ta = +25 °C VDD = 2.4 V to 5.5 V	± 1 Max.	× 10^{-6}

*1) Equivalent to ±1 minute of monthly deviation (excluding offset.)
*2) Equivalent to ±13 seconds of monthly deviation (excluding offset.)

Current consumption characteristics

Ta = -40 °C to +85 °C

Item	Symbol	Conditions	Min.	Typ.	Max.	Unit
Current Consumption	IBAT	RX-8035SA VBAT = 3.0V, VDD = 0.0V SCL=SDA = GND	-	350	1200	nA
		RX-8035LC VBAT = 3.0V, VDD = 0.0V SCL=SDA = GND		400		
	IDD	VDD = 3.0V SCL=SDA = GND CLKOUT = open	-	1.40	2.50	μA

Power supply detection voltage

Ta = -40 °C to +85 °C

Item	Symbol	Conditions	Min.	Typ.	Max.	Unit
Voltage of low battery voltage.	VLOW	-	1.10	1.25	1.40	V
Power switching voltage (VDD to VBAT)	VD2B	+25 °C	2.328	2.40	2.472	V

REAL TIME CLOCK MODULE (SPI-Bus)

High-Stability Frequency with Built in Timestamp and Power Switching

RX-4035SA / LC

RoHS Compliant

Product Number
RX-4035SA B: X1B000192000100
RX-4035SA AC: X1B000192000200
RX-4035SA AA: X1B000192000300
RX-4035LC B: X1B000202000100
RX-4035LC AC: X1B000202000200
RX-4035LC AA: X1B000202000300

- Built-in 32.768 kHz crystal unit : Frequency adjusted for high accuracy. (± 5 ×10^{-6} / Ta = +25 °C)
- Interface Type : SPI-Bus (1MHz)
- Operating voltage range : 2.4 V to 5.5 V
- Timekeeping voltage range : 1.0 V to 5.5 V
- Low backup current : 350 nA (SA) 400 nA (LC) / 3 V (Typ.)
- Event detection and Time stamp : One-shot full timestamp and interrupt.
- Dual event detection ports : Each terminal has a de-bounce circuit.
- Auto power switching functions : When VDD deteriorates than 2.4V, internal source is switched to VBAT.

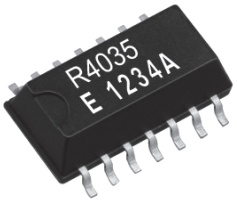

RX-4035SA

RX-4035LC

Block diagram

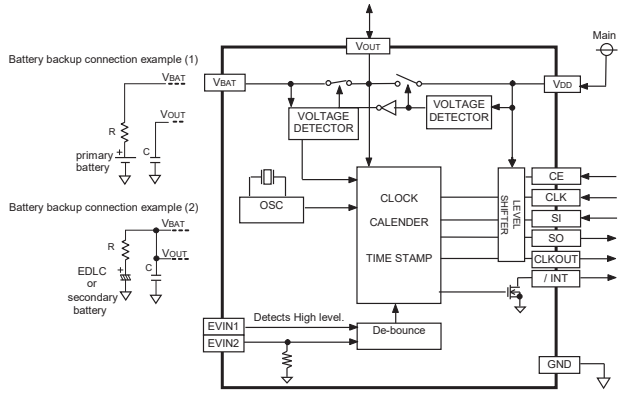

Overview

- **The event detection and Timestamp function**
  Dual event detection terminals.
  Selectable de-bounce time 35ms or 2s.
  Available event detection interrupt output.
- **Power switching functions.**
  - An external diode is unnecessary to have a reverse current prevention switch built-in in the VBAT side to connect a primary cell to.
  - When VDD is less than 2.4V, an internal source is switched to VBAT.
  - Note: When the supply from VBAT, SPI interface are disabled.
- **Alarm, Periodic interrupt, 32.768kHz clock output.**
  - Available monthly-alarm and weekly-alarm.
  - Interrupt period are selectable from 2Hz to Monthly.
  - CLKOUT outputs 32.768kHz clock powered by VDD.

Pin function

Signal Name	Input / Output	Function
VBAT	—	Power supply for backup.
Vout	Output	Switched power out. (maximum output current 20mA)
CE	Input	SPI chip enable.
CLK	Input	SPI serial clock.
SO	Output	SPI data out.
SI	Input	SPI data in.
GND	—	Ground
EVIN1	Input	Event detection input 1
EVIN2	Input	Event detection input 2
/ INT	Output	Interrupt out.
CLKOUT	Output	32.768kHz output. (CMOS. Can not inhibit.)
N.C.	—	Do not connect.
VDD	—	Main power supply.

Terminal connection / External dimensions (Unit:mm)

RX – 4035 SA

1. N.C.
2. CLK
3. CLKOUT
4. VBAT
5. N.C.
6. VDD
7. Vout
14. EVIN2
13. SI
12. SO
11. GND
10. / INT
9. CE
8. EVIN1

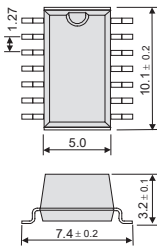

SOP – 14 pin

RX – 4035 LC

1. Vout
2. VDD
3. N.C.
4. VBAT
5. CLKOUT
6. CLK
12. EVIN1
11. CE
10. / INT
9. GND
8. SO
7. SI

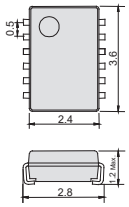

VSOJ – 12pin

The metal case inside of the molding compound may be exposed on the top or bottom of this product.
This purely cosmetic and does not have any effect on quality, reliability or electrical specs.

Prohibition of use of glue after a mount of a product
An LC package product cannot use glue and resin coating.
When such a processing is necessary, please examine a CE package product.

Specifications (characteristics)

∗ Refer to application manual for details.

■ Recommended Operating Conditions

Item	Symbol	Conditions	Min.	Typ.	Max.	Unit
Operating voltage	VACCESS	VDD	2.4	3.0	5.5	V
Time keeping voltage	VCLK	VBAT	1.0	3.0	5.5	V
Operating temperature	TOPR	—	-40	+25	+85	°C
Storage temperature	TSTG	—	-55	—	+125	°C

■ Frequency characteristics

Item	Symbol	Conditions	Rating	Unit
Frequency tolerance	Δ f / f	Ta = +25°C VBAT = 3.0 V	B: 5 ± 23 *1) AA: 5 ± 5 *2) AC: 0 ± 5 *2)	× 10^{-6}
Oscillation start-up time	tSTA	Ta = +25 °C VDD = 3.0 V	1 Max.	s
Frequency / voltage characteristics	f / V	Ta = +25 °C VDD = 2.4 V to 5.5 V	± 1 Max.	× 10^{-6}

∗1) Equivalent to ±1 minute of monthly deviation (excluding offset.)
∗2) Equivalent to ±13 seconds of monthly deviation (excluding offset.)

■ Current consumption characteristics

Ta = -40 °C to +85 °C

Item	Symbol	Conditions	Min.	Typ.	Max.	Unit
Current Consumption	IBAT	RX-4035SA VBAT = 3.0V, VDD = 0.0V CE = 0V, CLKOUT = open	-	350	1200	nA
		RX-4035LC VBAT = 3.0V, VDD = 0.0V CE = 0V, CLKOUT = open		400		
	IDD	VDD = 3.0V CE = 0V CLKOUT = open	-	1.40	2.50	μA

■ Power supply detection voltage

Ta = -40 °C to +85 °C

Item	Symbol	Conditions	Min.	Typ.	Max.	Unit
Voltage of low battery detection	VLOW	-	1.10	1.25	1.40	V
Power switching voltage (VDD to VBAT)	VD2B	+25 °C	2.328	2.40	2.472	V

REAL TIME CLOCK MODULE (I^2C-Bus)

Built-in EEPROM and Unique ID-ROM

RoHS Compliant

Product Number
RX-8731LC : Q418731C2000100

RX-8731LC

- Built in frequency adjusted 32.768 kHz crystal unit.
- Interface Type : I^2C-Bus interface (400 kHz)
- Operating voltage range : 1.7 V to 5.5 V
- Wide voltage for Timekeeping : 1.3 V to 5.5 V
- Low backup current : 0.35 μA / 3 V (Typ.)
- 32.768 kHz frequency output function : C-MOS output With Control Pin
- The various functions include full calendar, alarm, timer.

Block diagram

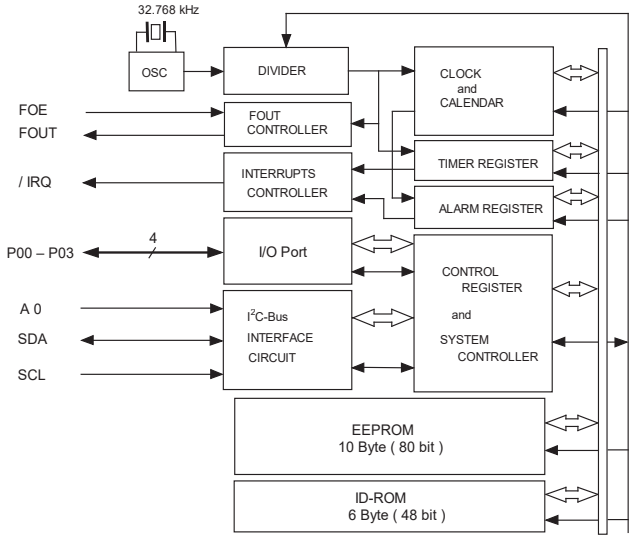

Overview

• Built in EEPROM and ID-ROM
- Built in 10 Byte (80 bit) EEPROM
- Built in 6 Byte (48 bit) ID-ROM

• Programmable I/O ports
- 4 Programmable I/O ports

• Interface Type
- I^2C-Bus high-speed bus specifications. (400 kHz)

• 32.768 kHz frequency output function
- FOUT pin output (C-MOS output), CL=30 pF
- FOE pin enables output on/off control.
- Output frequency is selectable.
  < 32.768 kHz, 1024 Hz, 1 Hz >

• The various interrupt function
- Alarm interrupt function
- Timer interrupt function
- Update interrupt function

Pin Function

Signal Name	Input / Output	Function
SCL	Input	Serial Clock input pin.
SDA	Bi-directional	Data input and output pin.
A 0	Input	Device address A0 input pin.
FOUT	Output	FOUT pin is 32.768 kHz clock output pin (C-MOS) that output control is possible. FOE pin control the frequency output from FOUT pin with FSEL1-bit and FSEL0-bit.
FOE	Input	
/ IRQ	Output	Interrupt output pin. (N-ch open drain)
P00 P01 P02 P03	Bi-directional	Programmable I/O ports.
V_{DD}	—	Connected to a positive power supply.
GND	—	Connected to a ground.

Terminal connection / External dimensions (Unit:mm)

RX – 8731 LC

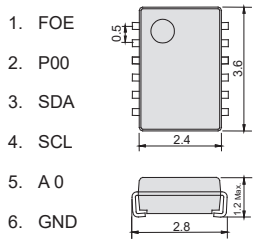

VSOJ – 12pin

Prohibition of use of glue after a mount of a product
An LC package product cannot use glue and resin coating.
When such a processing is necessary, please examine a CE package product.

Specifications (characteristics)

∗ **Refer to application manual for details.**

■ Recommended Operating Conditions

Item	Symbol	Conditions	Min.	Typ.	Max.	Unit
Power voltage	V_{DD}	—	1.7	3.0	5.5	V
Clock voltage	V_{CLK}	—	1.3	3.0	5.5	V
Operating temperature	T_{OPR}	—	-40	+25	+85	°C

■ Frequency characteristics

Item	Symbol	Conditions	Rating	Unit
Frequency tolerance	Δ f / f	T_a = +25 °C V_{DD} = 3.0 V	B: 5 ± 23 *	× 10^{-6}
Oscillation Start-up time	t_{STA}	T_a = +25 °C V_{DD} = 1.6 V	1 Max.	s
		T_a = -40 °C to +85 °C V_{DD} = 1.6 V	3 Max.	s

*Equivalent to ±1 minute of monthly deviation

■ Current consumption characteristics

Ta = -40 °C to +85 °C

Item	Symbol	Conditions		Min.	Typ.	Max.	Unit
Current Consumption	I_{BK}	fSCL = 0 Hz / IRQ = OFF FOUT : output OFF (Hi - z)	V_{DD} = 5 V	-	0.45	1.5	μA
			V_{DD} = 3 V	-	0.35	1.4	
	I_{32k}	fSCL = 0 Hz / IRQ = OFF FOUT : 32.768 kHz output CL = 30 pF	V_{DD} = 5 V	-	8.0	16.0	μA
			V_{DD} = 3 V	-	5.0	10.0	

REAL TIME CLOCK MODULE (I²C-Bus)

Low current consumption

RX-8571SA / LC

Product Number
RX-8571SA : X1B000072000100
RX-8571LC : X1B000052000100

- Built-in frequency adjusted 32.768 kHz crystal unit.
- Interface Type : I²C-Bus Interface (400 kHz)
- Operating voltage range : 1.6 V to 5.5 V
- Wide voltage for timekeeping : 1.3 V to 5.5 V
- Low backup current : 220 nA / 3 V (Typ.)
- 32.768 kHz frequency output function : C-MOS output With Control Pin
- Built-in user RAM :128 bit (8 bit x 16, SRAM)
- The various functions include full calendar, alarm, timer, etc. (Long-running timer : 65535 hours)

Block diagram

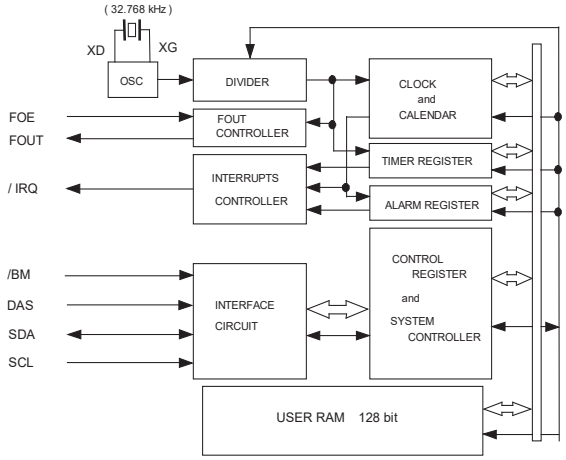

Overview

- 32.768 kHz frequency output function
  - FOE pin enable output on/off control.
  - Output frequency can be selected as 32.768 kHz, 1024 Hz, 1 Hz.
- Timer Function
  - Timer function can be set up between 1/4096 second and 65535 hours.
  - Timing period are 1 h, 1 min, 64 Hz, 4096 Hz.
  - It is recorded automatically to TF-bit at the time of event occurs, and possible to output with /IRQ pin output.
- Alarm function
  - Alarm function can be set to day of week, day, hour, or minute.
  - It is recorded automatically to AF-bit at the time of event occurs, and possible to output with /IRQ pin output.
- User RAM
  - 128 bit (8 bit x 16, SRAM)

Terminal connection / External dimensions

(Unit:mm)

RX – 8571 SA

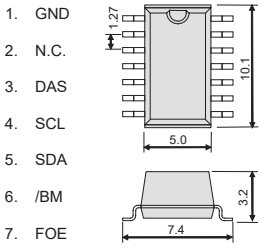

1.	GND	14.	FOUT
2.	N.C.	13.	N.C.
3.	DAS	12.	N.C.
4.	SCL	11.	N.C.
5.	SDA	10.	/ IRQ
6.	/BM	9.	N.C.
7.	FOE	8.	VDD

SOP - 14 pin

RX – 8571 LC

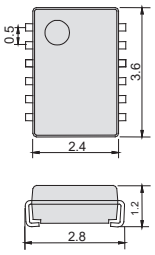

1.	FOE	12.	VDD
2.	/BM	11.	N.C.
3.	SDA	10.	N.C.
4.	SCL	9.	N.C.
5.	DAS	8.	/IRQ
6.	GND	7.	FOUT

VSOJ – 12pin

The metal case inside of the molding compound may be exposed on the top or bottom of this product. This purely cosmetic and does not have any effect on quality, reliability or electrical specs.

Prohibition of use of glue after a mount of a product
LC package product cannot use glue and resin coating.
When such a processing is necessary, please examine a CE package product.

Specifications (characteristics)

∗ Refer to application manual for details.

■ Recommended Operating Conditions

Item	Symbol	Conditions	Min.	Typ.	Max.	Unit
Power voltage	VDD	—	1.6	3.0	5.5	V
Clock voltage	VCLK	—	1.3	3.0	5.5	V
Operating temperature	TOPR	—	-40	+25	+85	°C

■ Frequency characteristics

Item	Symbol	Conditions	Rating	Unit
Frequency tolerance	Δ f / f	Ta = +25 °C VDD = 3.0 V	B: 5 ± 23 *	× 10^{-6}
Oscillation start up time	tSTA	Ta = +25 °C VDD = 1.6 V	1 Max.	s

∗ Please ask for tighter tolerance. (Equivalent to ±1 minute of monthly deviation)

■ Current consumption characteristics

Item	Symbol	Conditions		Min.	Typ.	Max.	Unit
Current Consumption	IDD	FOE=/BM="L" FOUT= OFF /IRQ = OFF VDD =3.0V Ta= +25 °C	LC type	-	220	400	nA
			SA type	-	200	400	
		FOE=/BM="L" FOUT= OFF /IRQ = OFF VDD =3.0V Ta= -40 °C to +85 °C		-	-	550	nA

REAL TIME CLOCK MODULE (SPI-Bus)
LOW BACKUP VOLTAGE

RoHS Compliant

Product Number
RX-4571LC : Q414571C2000100
RX-4571SA : Q41457152000100

RX-4571LC / SA

- Built in frequency adjusted 32.768 kHz crystal unit.
- Interface Type : 3-wire serial interface
- Operating voltage range : 1.6 V to 5.5 V
- The wide voltage for time keeping. : 1.0 V to 5.5 V / T_a = +25 °C
- Low backup current : 0.32 μA (Typ.) / 3 V
- 32.768 kHz frequency output function : C-MOS output With OE pin.
- Real-time clock function
  Clock/calendar function, auto leap year correction function, alarm and Timer interrupt function, etc.

Block diagram

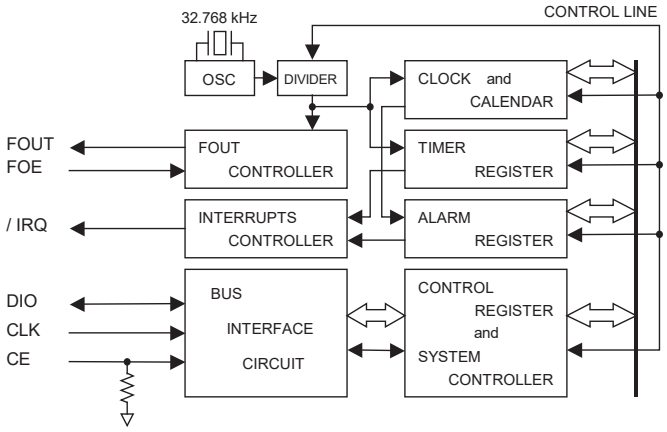

Overview

- **32.768 kHz frequency output function**
  - FOUT pin output (C-MOS output) , CL=30 pF
- **Timer function**
  - Timer function which can be set up between 1/4096 second and 4095 minutes.
- **Alarm function**
  - Alarm function can be set to any combination of day, day of week, hour, or minute.
- **Pin Function**

Signal Name	Input / Output	Function
CE	Input	The chip enabled input pin 0. (It has a built -in pull-down resistance)
CLK	Input	The shift clock input pin for serial data transfer.
DIO	Bi-directional	The data input / output pin for serial data transfer.
FOUT	Output	32.768 kHz clock output pin with the output control function. (C-MOS)
FOE	Input	FOE pin control the condition of FOUT with FSEL1-bit, FSEL0-bit, etc.
/ IRQ	Output	Interrupt output (N-ch open drain)
V_{DD}	—	Connected to a positive power supply.
GND	—	Connected to a ground.

Terminal connection / External dimensions

(Unit:mm)

RX – 4571 LC

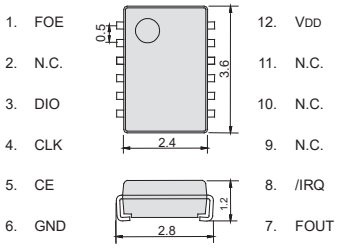

VSOJ – 12pin

RX – 4571 SA

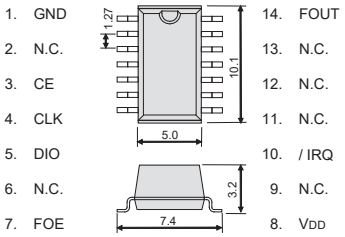

SOP - 14 pin

Prohibition of use of glue after a mount of a product
An LC package product cannot use glue and resin coating.
When such a processing is necessary, please examine a CE package product.

The metal case inside of the molding compound may be exposed on the top or bottom of this product.
This purely cosmetic and does not have any effect on quality, reliability or electrical specs.

Specifications (characteristics)

*** Refer to application manual for details.**

■ Recommended Operating Conditions

Item	Symbol	Conditions	Min.	Typ.	Max.	Unit
Power voltage	V_{DD}	–	1.6	3.0	5.5	V
Clock voltage	V_{CLK}	T_a = +25 °C	1.0	3.0	5.5	V
		T_a = -40 to +85 °C	1.1	3.0	5.5	V
Operating temperature	T_{OPR}	–	-40	+25	+85	°C

■ Frequency characteristics

Item	Symbol	Conditions	Rating	Unit
Frequency tolerance	Δ f / f	T_a = +25 °C V_{DD} = 3.0 V	B: 5 ± 23 *	× 10^{-6}
Oscillation start-up time	t_{STA}	T_a = +25 °C V_{DD} = 1.6 V	1 Max.	s

* Please ask for tighter tolerance. (Equivalent to ±1 minute of monthly deviation)

■ Current consumption characteristics

T_a = -40 °C to +85 °C

Symbol	Conditions		Min.	Typ.	Max.	Unit
I_{BK}	CE = GND /IRQ = OFF FOUT ; output OFF (Hi - z)	V_{DD} = 5 V	-	0.40	1.00	μA
		V_{DD} = 3 V	-	0.32	0.95	
I_{32k}	CE = GND /IRQ = OFF FOUT ; 32.768 kHz output ON CL = 30 pF	V_{DD} = 5 V	-	8.0	14.0	μA
		V_{DD} = 3 V	-	5.0	8.5	

REAL TIME CLOCK MODULE (I²C-Bus)

Low current consumption

Product Number
RX-8564LC : Q418564C2000100

RX-8564LC

- Built in frequency adjusted 32.768 kHz crystal unit.
- Interface Type : I²C-Bus Interface (400 kHz)
- Operating voltage range 1.8 : V to 5.5 V
- Timekeeper voltage range 1.0 : V to 5.5 V / -20 °C to +70 °C
- Low backup current 275 : nA / 3.0 V(Typ.)
- 32.768 kHz frequency output function : C-MOS output With Control Pin
- The various functions include full calendar, alarm, timer, and power supply voltage monitoring function

Block diagram

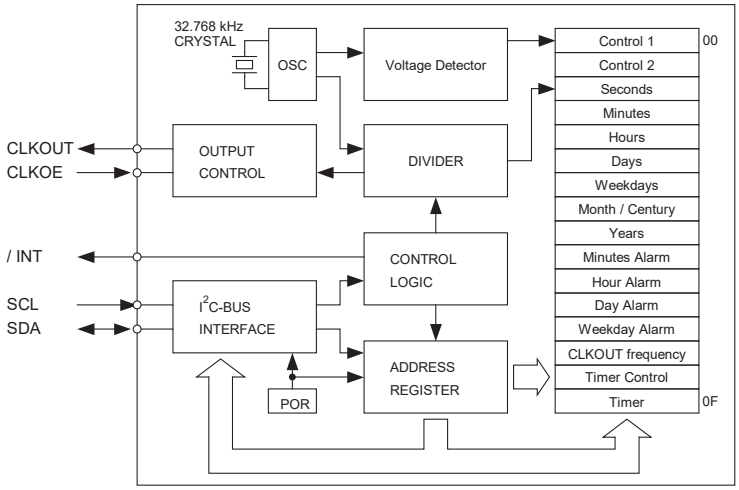

Overview

● Interface Type
- I²C-Bus Interface. (Hi-speed bus specifications 400 kHz)
- ∗ I²C-Bus slave address : read A3h and write A2h

● Low Timekeeper voltage range
- 1.0 V to 5.5 V / Ta = -20 °C to +70 °C
- 1.1 V to 5.5 V / Ta = -40 °C to +85 °C

● 32.768 kHz frequency output function
- CLKOUT pin output (C-MOS output), CL=30 pF
- CLKOE pin enables output on/off control.
- Output selectable
  <32.768 kHz, 1024 Hz, 32 Hz, 1 Hz>

● The various interrupt function
- Timer function can be set up between 1/4096 second and 255 minutes.
- Alarm function can be set to any combination of day of week, hour, or minute.

Pin Function

Signal Name	Input/Output	Function
SCL	Input	Serial clock input pin.
SDA	Bi-directional	Data input and output pin.
CLKOUT	Output	32.768 kHz clock output pin with the output control function. (C-MOS) CLKOE pin control the condition of CLKOUT with FE-bit, etc.
CLKOE	Input	
/INT	Output	Interrupt output (N-ch open drain)
VDD	—	Connected to a positive power supply.
GND	—	Connected to a ground.

CLKOE pin input	FE bit	CLKOUT pin output	
HIGH	1	Output	(C-MOS)
	0	OFF	(LOW)
LOW	1	OFF	(LOW)
	0	OFF	(LOW)

Terminal connection / External dimensions (Unit:mm)

RX – 8564 LC

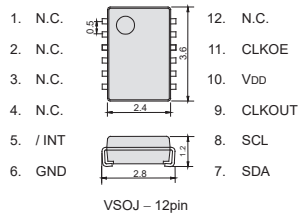

VSOJ – 12pin

Prohibition of use of glue after a mount of a product
LC package product cannot use glue and resin coating.
When such a processing is necessary, please examine a CE package product.

Specifications (characteristics)

∗ **Refer to application manual for details.**

■ Recommended Operating Conditions

Item	Symbol	Conditions	Min.	Typ.	Max.	Unit
Power voltage	VDD	—	1.8	3.0	5.5	V
Clock voltage	VCLK	—	VLOW	3.0	5.5	V
Operating temperature	TOPR	—	-40	+25	+85	°C

■ Low voltage detection

Item	Symbol		Conditions	Typ.	Max.	Unit
Low voltage detection	VLOW	LC	Ta = -20 °C ~ +70 °C	0.9	1.2	V
			Ta = -40 °C ~ +85 °C	0.9	1.3	V

■ Frequency characteristics

Item	Symbol	Conditions	Rating	Unit
Frequency tolerance	Δ f / f	Ta = +25 °C VDD = 3.0 V	B: 5 ± 23 *	× 10^{-6}

* Please ask for tighter tolerance. (Equivalent to ±1 minute of monthly deviation)

■ Current consumption characteristics

Ta = -40 °C to +85 °C

Item	Symbol	Conditions		Min.	Typ.	Max.	Unit
Current Consumtion	IBK	fSCL = 0 Hz CLKOE = GND CLKOUT ; output OFF (LOW)	VDD = 5 V	-	330	800	nA
			VDD = 3 V	-	275	700	
	I32k	fSCL = 0 Hz CLKOE = VDD CLKOUT ; 32.768 kHz output ON (Output=OPEN ; CL = 0 pF)	VDD = 5 V	-	2.5	3.4	μA
			VDD = 3 V	-	1.5	2.2	

REAL TIME CLOCK MODULE (I²C-Bus)

Low current consumption

RX8010SJ

Product Number
RX8010SJ : X1B000242000100

- Built in frequency adjusted 32.768 kHz crystal unit.
- Interface Type : I²C-Bus interface (400 kHz)
- Operating voltage range : 1.6 V to 5.5 V
- Wide voltage for time keeping. : 1.1 V to 5.5 V
- Low backup current : 160 nA / 3 V (Typ.)
- Frequency output function : C-MOS or Open-Drain output
- Built-in user RAM : 128 bit (8 bit x 16, SRAM)
- The various functions include full calendar, alarm, timer, etc.
- This product is conform to industrial standard SOP8 package, and it can be mounted to the common land pattern.

Epson prepared Linux driver for development.
(http://www5.epsondevice.com/en/information/support/linux_rtc/)

The registered trademark Linux® is used pursuant to a sublicense from LMI(Linux Mark Institute)

Block diagram

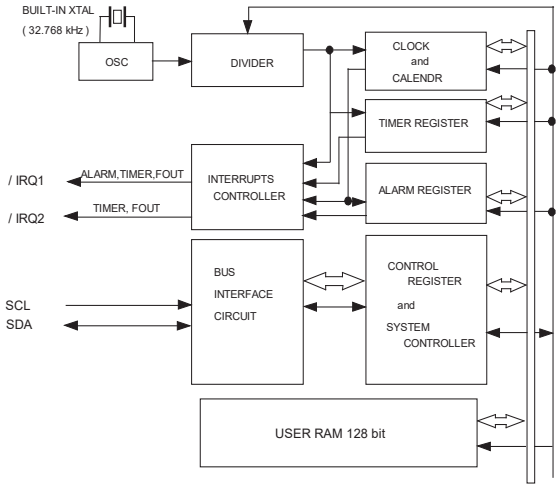

Overview

- **Interface Type**
  - I²C-Bus high-speed bus specifications. (400 kHz)
- **Frequency output function**
  - It may select a CMOS or open drain output
  - Output frequency can be selected as 32.768kHz, 1024Hz, 1Hz.
- **Timer function**
  - Timer function can be set up between 1/4096 second and 65535 hours.
  - Timing period are 1hour, 1min, 64Hz, 4096Hz.
  - It is recorded automatic to TF-bit at the time of event occurrence, and possible to output with /IRQ1 or /IRQ2 pin.
- **Alarm function**
  - Alarm function can be set to day of week, day, hour, and minute.
  - It is recorded automatic to AF-bit at the time of event occurrence, and possible to output with /IRQ1 pin.
- **User RAM**
  - 128 bit (8 bit x 16, SRAM)

Pin Function

Signal Name	Input / Output	Function
SCL	Input	This is a shift clock input pin for serial data transmission.
SDA	Input/Output	This is the data input/output pin for serial data transfer.
/ IRQ1	Output	This pin outputs interrupt signals ("L" level) for alarm, timer, time update, and 32.768kHz. This is an N-ch open-drain output.
/ IRQ2	Output	This pin outputs interrupt signals ("L" level) for timer and FOUT. This is a C-MOS output.
V_{DD}	Supply	This is a power-supply pin.
GND	Supply	This pin is connected to a ground.

Terminal connection / External dimensions (Unit:mm)

RX8010SJ

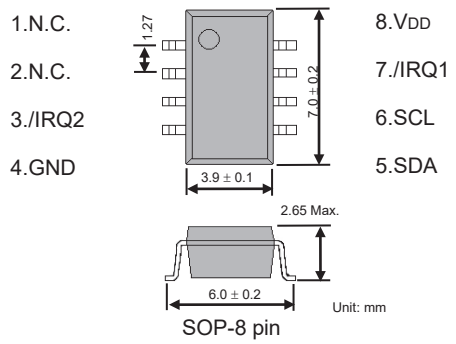

SOP-8 pin

The metal case inside of the molding compound may be exposed on the top or bottom of this product. This purely cosmetic and does not have any effect on quality, reliability or electrical specs.

Specifications (characteristics)

∗ **Refer to application manual for details.**

■ Recommended Operating Conditions

Item	Symbol	Conditions	Min.	Typ.	Max.	Unit
Power voltage	V_{DD}	—	1.6	3.0	5.5	V
Clock voltage	V_{CLK}	—	1.1	3.0	5.5	V
Operating temperature	T_{OPR}	—	-40	+25	+85	°C

■ Frequency characteristics

Item	Symbol	Conditions	Rating	Unit
Frequency tolerance	Δf / f	Ta = +25 °C V_{DD} = 3.0 V	B: 5 ± 23 *	× 10^{-6}
Oscillation Start-up time	t_{STA}	Ta = +25 °C V_{DD} = 1.6 V ~ 5.5 V	1 Max.	s
		Ta = -40 °C to +85 °C V_{DD} = 1.6V ~ 5.5V	3 Max.	s

*Equivalent to ±1 minute of monthly deviation

■ Current consumption characteristics

Ta = -40 °C to +85 °C

Item	Symbol	Conditions		Min.	Typ.	Max.	Unit
Current Consumption	I_{BK}	Input pins are "L" fCLK = 0 Hz, /IRQ1,2 = OFF TSEL2="1"	V_{DD} = 5 V	-	-	350	nA
			V_{DD} = 3 V	-	160	320	
	I_{32k}	fCLK = 0 Hz, /IRQ1: 32.768 kHz ON, /IRQ2: OFF	V_{DD} = 5 V	-	0.60	1.10	μA
			V_{DD} = 3 V	-	0.52	0.90	

REAL TIME CLOCK MODULE (SPI & I²C-Bus)

Power Switching and Low current consumption

RX6110SA B

Product Number
RX6110SA B : X1B000232000100

- Built in frequency adjusted 32.768 kHz crystal unit.
- Interface Type : SPI & I²C -Bus
- Operating voltage range : 1.6 V to 5.5 V
- The wide voltage for time keeping. : 1.1 V to 5.5 V
- Low backup current : 130 nA / 3 V (Typ.)
- Built-in user RAM : 128 bit (8 bit × 16, SRAM)
- Auto power switching functions : When VDD deteriorates than 1.6V, internal source is switched to VBAT.
- The various functions include full calendar, alarm, timer.

Epson prepared Linux driver for development.
(http://www5.epsondevice.com/en/information/support/linux_rtc/)

The registered trademark Linux® is used pursuant to a sublicense from LMI(Linux Mark Institute)

Block diagram

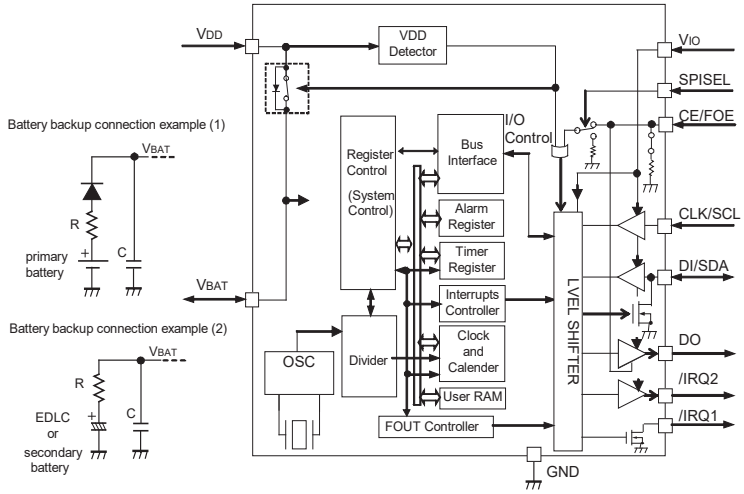

Overview

- Interface type.
  - SPI-Bus and I²C-Bus interface.
  - By a terminal, a switchover of the interface is possible.
- Built-in auto power switching function
  - To efficiently charge from VDD to backup battery (Secondary battery, Large capacitor) connected to VBAT is possible. Detects VDD voltage drop(VDET-) and automatically switches to the backup battery.
- Frequency output function
  - Output frequency is selectable from 32.768kHz, 1024Hz,1Hz.
- Timer function
  - Timer function is selectable in 1/4096 second from 65535 hours.
- Timer source clock are 1hour, 1min, 64Hz, 4096Hz.
  - It is recorded automatic to TF-bit at the time of event occurrence, and possible to output with /IRQ1 or /IRQ2 pin.
- Alarm function
  - Alarm function can be set to day of week, day, hour, and minute.
  - It is recorded automatic to AF-bit at the alarm occurrence, and possible to output with /IRQ1 pin output.
- User RAM
  - 128 bit (8 bit x 16, SRAM)

Pin Function

Signal Name	Input/Output	Function
SPISEL	Input	The interface select pin. SPI is chosen at a "H" level (VIO voltage) / I²C is chosen at a "L" level (GND voltage).
CE/FOE	Input	SPI: Should be held high to allow access to the CPU. Incorporates a pull-down resistor. I²C: It is an input pin for controlling the DO/FOUT output. When the frequency output from a DO/FOUT pin does not need, CE/FOE pin must be connected to GND.
CLK/SCL	Input	This is a shift clock input pin for serial data transmission.
DI/SDA	Input / Output	SPI: This is the data input pin for serial data transfer. I²C: This is the data input/output pin for serial data transfer.
DO/FOUT	Output	SPI: This is the data output pin for serial data transfer. I²C: This is the C-MOS output pin with output control provided via the CE/FOE pin. (frequency selection: 32.768 kHz / 1024 Hz / 1Hz / Hi-z)
/ IRQ1	Output	This pin outputs interrupt signals ("L" level) for alarm, timer, time update, and FOUT. This is an N-ch open-drain output. This pin can output even a backup mode.
/ IRQ2	Output	This pin outputs interrupt signals ("L" level) for timer and FOUT. This is an C-MOS output. This pin becomes Hi-z in less than VDD=1.6V.
VDD	–	This is a power-supply pin. It can impress the voltage unlike VIO.
VIO	–	This pin is a power supply for input and the output and input / output pins. Connected to a positive power supply.
VBAT	–	Connect a secondary battery or capacitor for backup power supply. If a backup power supply is not present, this pin connect to VDD
GND	–	Connected to a ground.

Terminal connection / External dimensions

(Unit:mm)

RX 6110 SA

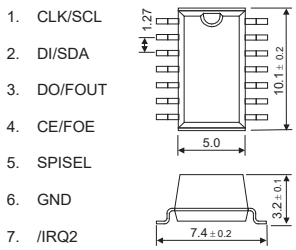

SOP - 14 pin

The metal case inside of the molding compound may be exposed on the top or bottom of this product.
This purely cosmetic and does not have any effect on quality, reliability or electrical specs.

Specifications (characteristics)

* Refer to application manual for details.

Recommended Operating Conditions

Item	Symbol	Conditions	Min.	Typ.	Max.	Unit
Power voltage	VDD	—	1.6	3.0	5.5	V
Clock voltage	VCLK	—	1.1	3.0	5.5	V
Operating temperature	TOPR	—	-40	+25	+85	°C

Frequency characteristics

Item	Symbol	Conditions	Rating	Unit
Frequency tolerance	Δf / f	Ta = +25 °C VDD = 3.0 V	B: 5 ± 23 *1	× 10⁻⁶
Oscillation start-up time	tSTA	Ta = +25 °C VDD = 1.6 V	1 Max.	s

*1) Equivalent to ±1 minute of monthly deviation (excluding offset.) / Standard product

Current consumption characteristics

Ta = -40 °C to +85 °C

Item	Symbol	Conditions	Min.	Typ.	Max.	Unit
Current Consumption	IBK	VBAT = 3.0 V Input pins are "L" ,VDD = 0 V DO/FOUT=OFF, fCLK = 0 Hz, /IRQ1,2 = OFF, TSEL2="1" It include an OFF leak current of SW between the power supply (VBAT-VDD)	-	130	250	nA
	I32k	VDD = 3.0 V fCLK = 0 Hz, /IRQ1,2 = OFF, CE/FOE = VIO, DO/FOUT : 32.768 kHz ON , CL = 0 pF	-	1.5	2.1	μA

REAL TIME CLOCK MODULE (I^2C-Bus)

High-Stability

RoHS Compliant

Product Number
RX-8025SA AA : Q41802552000100
RX-8025SA AC : Q41802551000200

RX-8025SA

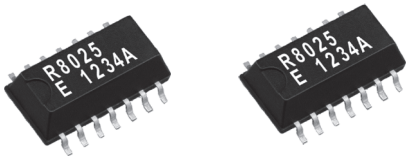

- Built-in 32.768 kHz crystal unit : Frequency adjusted for high accuracy ($\pm 5 \times 10^{-6}$ / Ta = +25 °C)
- Interface Type : I^2C-Bus Interface (400 kHz)
- Operating voltage range : 1.70 V to 5.5 V
- Wide voltage for timekeeping : 1.15 V to 5.5 V
- Various detection Functions : Ex. Oscillation stop detection function
- Low backup current : 0.48 μA / 3 V (Typ.)
- 32.768 kHz frequency output function : C-MOS output with OE pin.
- The various functions include full calendar, Dual alarm, Periodic interruption.

Block diagram

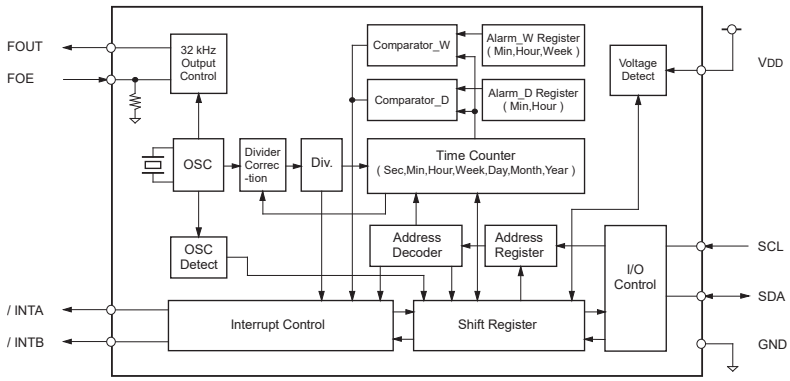

Overview

- **Features built-in 32.768 kHz crystal unit**
  - Frequency adjusted for high accuracy.
    ($\pm 5 \times 10^{-6}$ / Ta = +25 °C)
    (Equivalent to ±13 seconds of monthly deviation)
- **The various detection function**
  - Power supply voltage monitoring function (with selectable detection threshold)
  - Stop detection function
  - Power-on reset detection function
- **Alarm function and Periodic interrupt function**
  - The periodic interrupt outputs.
    Dual Alarm function.
    (Date of the week , Hour , minute)
    (Month, Day, Hour, Minute)

Pin Function

Signal Name	Input / output	Function
SCL	Input	Serial clock input pin
SDA	Bi-directional	Data input and output pin
FOUT	Output	32.768 kHz clock output pin with the output control function. (C-MOS)
FOE	Input	
/ INTA	Output	Interrupt output A pin (N-ch open drain)
/ INTB	Output	Interrupt output B pin (N-ch open drain)
TEST	—	* Used by the manufacture for testing. (Do not connect externally.)
VDD	—	Connected to a positive power supply.
GND	—	Connected to a ground.

FOE input	/CLEN1 bit	/CLEN2 bit	FOUT output
L	X	X	OFF (LOW)
H	0	0	32.768 kHz
	0	1	32.768 kHz
	1	0	32.768 kHz
	1	1	OFF(LOW)

Terminal connection / External dimensions (Unit:mm)

RX – 8025 SA

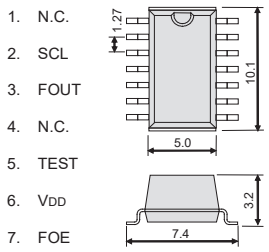

SOP – 14 pin

The metal case inside of the molding compound may be exposed on the top or bottom of this product.
This purely cosmetic and does not have any effect on quality, reliability or electrical specs.

Specifications (characteristics)

* Refer to application manual for details.

■ Recommended Operating Conditions

Item	Symbol	Conditions	Min.	Typ.	Max.	Unit
Power voltage	VDD	—	1.7	3.0	5.5	V
Clock voltage	VCLK	—	1.15	3.0	5.5	V
Operating temperature	TOPR	—	-40	+25	+85	°C

■ Frequency characteristics

Item	Symbol	Conditions	Range	Unit
Frequency tolerance	Δ f / f	Ta = +25 °C VDD = 3.0 V	AA: 5 ± 5 *1) AC: 0 ± 5 *2)	$\times 10^{-6}$
Oscillation start-up time	tSTA	Ta = +25 °C VDD = 2.0 V	1 Max.	s
Frequency voltage characteristics	f / V	Ta = +25 °C VDD = 2.0 V to 5.5 V	± 1 Max.	$\times 10^{-6}$

*1) *2) Equivalent to ±13 seconds of monthly deviation (excluding offset).

■ Current consumption characteristics

Ta = -40 °C to +85 °C

Item	Symbol	Conditions		Min.	Typ.	Max.	Unit
Curent Consumption	IBK	fSCL = 0Hz FOE = GND FOUT ; output OFF(LOW)	VDD = 5 V	-	0.60	1.80	μA
			VDD = 3 V	-	0.48	1.20	
	I32k	fSCL = 0Hz VDD, FOE = 5.5 V FOUT ; output ON (Output=OPEN; CL = 0 pF)	VDD = 5.5 V	-	3.0	6.5	μA

■ Power supply detection voltage

Ta = -30 °C to +70 °C

Item	Symbol	Conditions	Min.	Typ.	Max.	Unit
High-voltage mode	VDETH	VDD pin	1.90	2.10	2.30	V
Low-voltage mode	VDETL	VDD pin	1.15	1.30	1.45	V

REAL TIME CLOCK MODULE (SPI-Bus)

High-Stability Frequency

RX-4045SA

Product Number
RX-4045SA AA: Q41404552000100
RX-4045SA AC: Q41404551000200

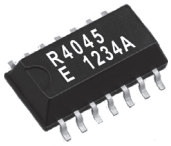

- Built-in 32.768 kHz crystal unit: Frequency adjusted for high accuracy. ($\pm 5 \times 10^{-6}$ / T_a = +25 °C)
- Interface Type : 4-wire serial interface
- Operating voltage range : 1.7 V to 5.5 V
- Wide Timekeeper voltage range : 1.15 V to 5.5 V
- Various detection Functions : Oscillation stop detection function etc.
- Low backup current : 0.48 μA / 3 V (Typ.)
- 32.768 kHz clock frequency output : N-ch open drain output
- Function of time and calendar, the various detection function, and interrupt function etc.

Block diagram

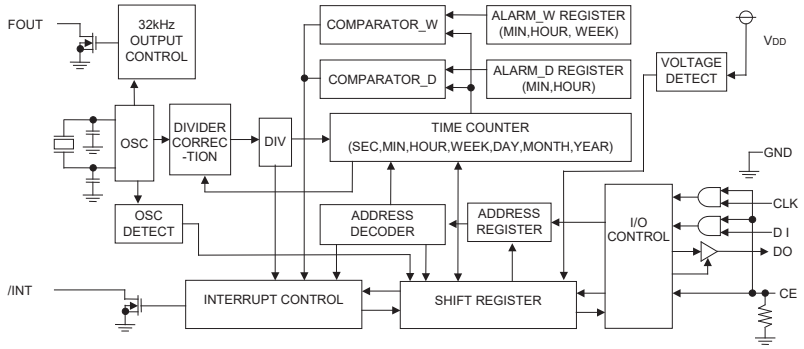

Overview

- **Features built-in 32.768 kHz crystal unit**
  - ▪Frequency adjusted for high accuracy ($\pm 5 \times 10^{-6}$ /T_a = +25 °C) (Equivalent to 13 seconds of monthly deviation)
- **The various detection Function**
  - ▪Power supply voltage monitoring function (with selectable detection threshold)
  - ▪Stop detection function
  - ▪Power-on reset detection function
- **Equipped with alarm and timer**
  - ▪Timer function produces a periodic interruption signal. As for the Alarm function an optional combination is produced. (Date of the week , time , minute)

Pin function

Signal Name	Input / Output	Function
CE	Input	The chip enabled input pin. (built -in pull-down resistance) At the " H " level, access becomes possible.
CLK	Input	The shift clock input pin for serial data transfer.
DI	Input	The data input pin for serial data transfer.
DO	Output	The data output pin for serial data transfer.
FOUT	Output	32.768 kHz clock output pin with the output control function (N-ch open drain) High impedance at the time of output off.
/ INT	Output	Interrupt output (N-ch open drain)
TEST	—	* Used by the manufacturer for testing. (Do not connect externally.)
V_{DD}	—	Connected to a positive power supply.
GND	—	Connected to a ground.

Terminal connection / External dimensions (Unit:mm)

RX – 4045 SA

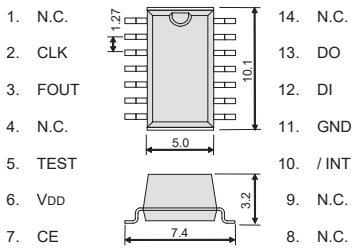

SOP – 14 pin

The metal case inside of the molding compound may be exposed on the top or bottom of this product. This purely cosmetic and does not have any effect on quality, reliability or electrical specs.

Specifications (characteristics)

* Refer to application manual for details.

■ Recommended Operating Conditions

Item	Symbol	Conditions	Min.	Typ.	Max.	Unit
Power voltage	V_{DD}	—	1.7	3.0	5.5	V
Clock voltage	V_{CLK}	—	1.15	3.0	5.5	V
Operating temperature	T_{OPR}	—	-40	+25	+85	°C

■ Frequency characteristics

Item	Symbol	Conditions	Rating	Unit
Frequency tolerance	Δf / f	T_a = +25°C V_{DD} = 3.0 V	AA: 5 ± 5 *1) AC: 0 ± 5 *2)	$\times 10^{-6}$
Oscillation start-up time	t_{STA}	T_a = +25 °C V_{DD} = 2.0 V	1 Max.	s
Frequency / voltage characteristics	f / V	T_a = +25 °C V_{DD} = 2.0 V to 5.5 V	± 1 Max.	$\times 10^{-6}$

*1) *2) Equivalent to ±13 seconds of monthly deviation (excluding offset.)

■ Current consumption characteristics

T_a = -40 °C to +85 °C

Item	Symbol	Conditions		Min.	Typ.	Max.	Unit
Current Consumption	I_{BK}	CE = GND FOUT ;output OFF (Hi-z)	V_{DD} = 5 V	-	0.60	1.80	μA
			V_{DD} = 3 V	-	0.48	1.20	
	I_{32k}	CE = GND FOUT ;32.768 kHz output ON	V_{DD} = 3 V	-	0.65	2.00	μA

■ Power supply detection voltage

T_a = -30 °C to +70 °C

Item	Symbol	Conditions	Min.	Typ.	Max.	Unit
High-voltage mode	V_{DETH}	V_{DD} pin	1.90	2.10	2.30	V
Low-voltage mode	V_{DETL}	V_{DD} pin	1.15	1.30	1.45	V

MHz Crystal Units

MHz Crystal Unit, Crystal Unit with Thermistor Recommendation Products

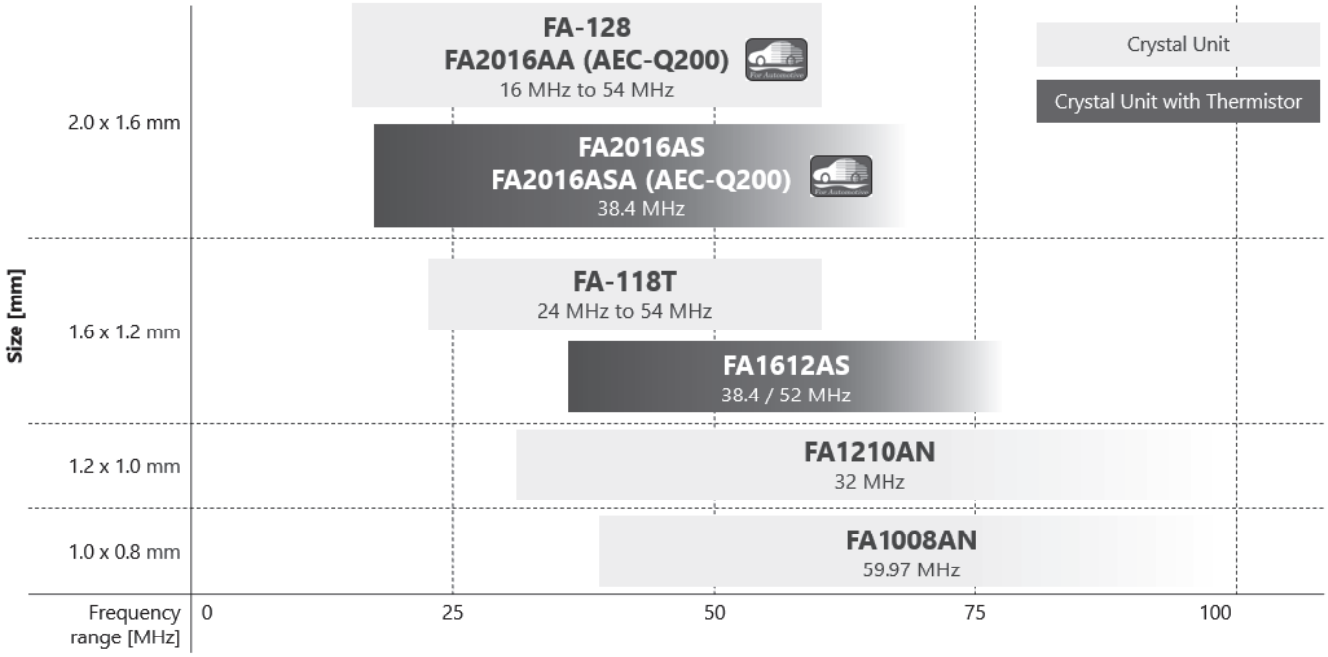

► MHz Crystal Unit

P	Model	Size [mm]	Nominal frequency range	Frequency tolerance (+25 °C) [x 10^{-6}]	Frequency vs. temperature characteristics [x10^{-6}] / Operating temperature [°C]	Motional resistance Max. [Ω]	Load Capacitance [pF]	Operating temperature [°C]
38	**FA1008AN**	1.0 × 0.8 × 0.3t	40 MHz 100 MHz	±10	±10 / -20 to +75 ±15 / -30 to +85 ±20 / -40 to +85	60	6 to ∞	-40 to +85 (-40 to +105)
39	**FA1210AN**	1.2 × 1.0 × 0.3t	32 MHz 100 MHz	±10	±10 / -20 to +75 ±15 / -30 to +85 ±20 / -40 to +85	100 (32 ≤ f < 50 MHz) 60 (50 ≤ f ≤ 100 MHz)	6 to ∞	-40 to +85 (-40 to +105)
40	**FA-118T**	1.6 × 1.2 × 0.35t	24 MHz 54 MHz	±10	±12 / -20 to +75	200 (24 ≤ f < 32 MHz) 100 (32 ≤ f < 36 MHz) 80 (36 ≤ f ≤ 54 MHz)	6 to ∞	-40 to +85
				±30	±30 / -20 to +75			
41	**FA-128**	2.0 × 1.6 × 0.5t	16 MHz 54 MHz	±10	±10 / -20 to +75	200 (16 ≤ f < 18 MHz) 150 (18 ≤ f < 20 MHz) 100 (20 ≤ f < 24 MHz) 80 (24 ≤ f < 26 MHz) 60 (26 ≤ f ≤ 54 MHz)		-40 to +85 (-40 to +105)
				±30	±30 / -20 to +75			
42	**FA-20H**	2.5 × 2.0 × 0.55t	12 MHz 54 MHz	±10	±10 / -20 to +75	150 (12 ≤ f < 16 MHz) 80 (16 ≤ f ≤ 25 MHz) 60 (25 < f ≤ 30 MHz) 50 (30 < f ≤ 35 MHz) 40 (30 < f ≤ 35 MHz)		
				±30	±30 / -20 to +75			
43	**FA-238V**	3.2 × 2.5 × 0.7t	12 MHz 15.999 MHz	±15 ±50	±30 / -20 to +70	100 (12 ≤ f ≤ 13 MHz) 80 (13 < f < 20 MHz) 60 (20 ≤ f < 25 MHz) 50 (25 ≤ f < 30 MHz) 40 (30 ≤ f ≤ 50 MHz)	7 to ∞	
	FA-238	3.2 × 2.5 × 0.7t	16 MHz 50 MHz					
	TSX-3225	3.2 × 2.5 × 0.6t	16 MHz 48 MHz	±10	±10 / -20 to +75	60 (16 ≤ f < 21 MHz) 40 (21 ≤ f ≤ 48 MHz)		
Automotive	**FA2016AA (AEC-Q200)**	2.0 × 1.6 × 0.5t	16 MHz 54 MHz	±10	±20 / -40 to +85	200 (16 ≤ f < 18 MHz) 150 (18 ≤ f < 20 MHz) 100 (20 ≤ f < 24 MHz) 80 (24 ≤ f < 26 MHz) 60 (26 ≤ f ≤ 54 MHz)	6 to ∞	-40 to +125
					±50 / -40 to +125			
Automotive	**FA-238A (AEC-Q200)**	3.2 ×2.5 × 0.7t	12 MHz 50 MHz	±15	±30 / -40 to +85	120 (12 ≤ f ≤ 13 MHz) 80 (13 < f < 20 MHz) 60 (20 ≤ f < 25 MHz) 50 (25 ≤ f ≤ 50 MHz)	7 to ∞	-40 to +125
					±50 / -40 to +125			

► MHz Crystal Unit (Built-in Thermistor)

P	Model	Size [mm]	Nominal frequency range	Frequency tolerance (reference temperature)*1 [x 10^{-6}]	Frequency vs. temperature characteristics [x10^{-6}] / Operating temperature [°C]	Motional resistance Max. [Ω]	Load Capacitance [pF]	Operating temperature [°C]
44	**FA1612AS**	1.6 × 1.2 × 0.65t	38.4 MHz 52 MHz	±10	±12 / -30 to +85	80	6 to ∞	-40 to +85
45	**FA2016AS**	2.0 × 1.6 × 0.65t	38.4 MHz	±10	±12 / -30 to +85	60	6 to ∞	-40 to +85
Web site	**FA-20HS**	2.5 × 2.0 × 1.0t	19.2 MHz 26 MHz	±10	±12 / -30 to +85	80 (19.2 MHz) 60 (26.0 MHz)	6 to ∞	-40 to +85
Automotive	**FA2016ASA (AEC-Q200)**	2.0 × 1.6 × 0.68t	38.4 MHz	±10	±12 / -30 to +85	50	6 to ∞	-40 to +105
					±30 / -40 to +105			

*1 Please contact us about reference temperature.

MHz RANGE CRYSTAL UNIT

FA1008AN

Product Number
FA1008AN: X1E000451xxxx26

- Nominal frequency range : 40 MHz to 100 MHz
- External dimensions : 1.0 × 0.8 mm, t = 0.3 mm Max.
- Overtone order : Fundamental
- Applications : Small wireless device
  Small wireless module
  Wearable device
  Health care equipment
  Small consumer equipment etc.

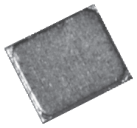

FA1008AN

(1.0 x 0.8 mm, t = 0.3 mm Max.)

Specifications (characteristics)

Item	Symbol	Specifications	Conditions / Remarks
Nominal frequency range	f_nom	40 MHz to 100 MHz	
		59.97 MHz	Standard frequency
Storage temperature range	T_stg	-40 °C to +125 °C	Storage as single product.
Operating temperature range	T_use	-40 °C to +85 °C (+105 °C)	Please contact us about +85 °C < T_use
Level of drive	DL	100 μW Max.	Recommended: 10 μW
Frequency tolerance (standard)	f_tol	±10 x 10^{-6}	+25 °C, Please contact us for requirements not listed in this specification.
Frequency versus temperature characteristics. (standard)	f_tem	±10 x 10^{-6} / -20 °C to +75 °C	Specify from the specifications on the left Please contact us for requirements not listed in this specification.
		±15 x 10^{-6} / -30 °C to +85 °C	
		±20 x 10^{-6} / -40 °C to +85 °C	
Load capacitance	CL	6 pF to ∞	Please specify.
Motional resistance (ESR)	R1	60 Ω Max.	DL = 10 μW
Frequency aging	f_age	±1 × 10^{-6} / year Max. (40 ≤ f ≤ 60 MHz) ±3 × 10^{-6} / year Max. (60 < f ≤ 100 MHz)	+25 °C, First year

Product name (Standard form)

FA1008AN	59.970000MHz	12.0	+10.0-10.0
①	②	③	④

①Model ②Frequency ③Load capacitance (pF) ④Frequency tolerance (× 10^{-6}, +25 °C)
In addition to the mentioned above specification item, please specify frequency temperature characteristics and operating temperature range in case of inquiry.

External dimensions (Unit:mm)

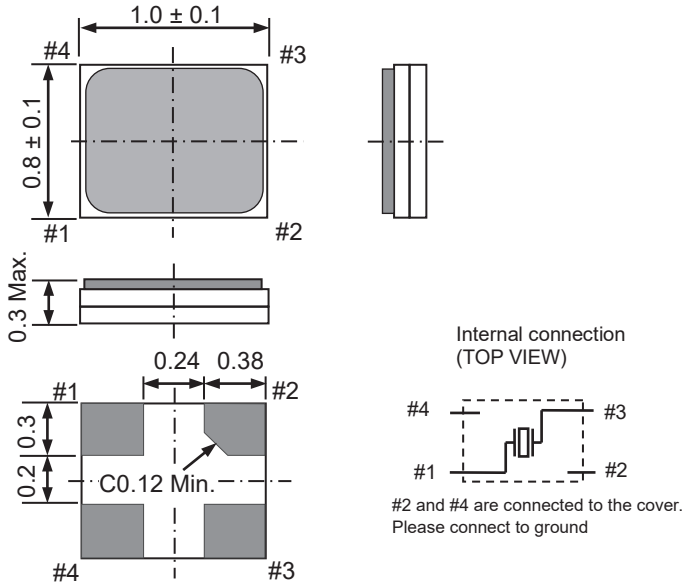

Footprint (Recommended) (Unit:mm)

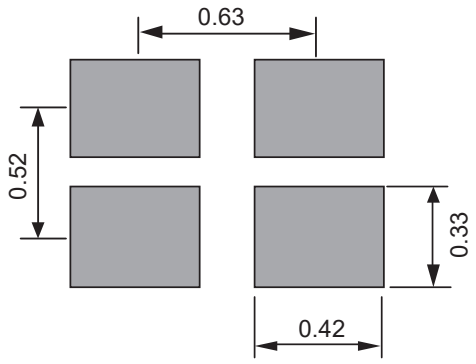

MHz RANGE CRYSTAL UNIT

FA1210AN

Product Number
FA1210AN: X1E000411xxxx26

- Nominal frequency range : 32 MHz to 100 MHz
- External dimensions : 1.2 × 1.0 mm , t = 0.3 mm Max.
- Overtone order : Fundamental
- Applications : Small wireless device
  Small wireless module
  Wearable device
  Health care equipment
  Small consumer equipment etc.

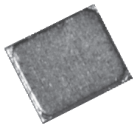

FA1210AN

(1.2 x 1.0 mm t = 0.3 mm Max.)

Specifications (characteristics)

Item	Symbol	Specifications	Conditions / Remarks
Nominal frequency range	f_nom	32 MHz to 100 MHz	
		32 MHz	Standard frequency
Storage temperature range	T_stg	-40 °C to +125 °C	Storage as single product.
Operating temperature range	T_use	-40 °C to +85 °C (+105 °C)	Please contact us about +85 °C < T_use
Level of drive	DL	100 μW Max.	Recommended: 10 μW
Frequency tolerance (standard)	f_tol	±10 x 10^{-6}	+25 °C, Please contact us for requirements not listed in this specification.
Frequency versus temperature characteristics. (standard)	f_tem	±10 x 10^{-6} / -20 °C to +75 °C	Specify from the specifications on the left Please contact us for requirements not listed in this specification.
		±15 x 10^{-6} / -30 °C to +85 °C	
		±20 x 10^{-6} / -40 °C to +85 °C	
Load capacitance	CL	6 pF to ∞	Please specify.
Motional resistance (ESR)	R1	100 Ω Max. (32 MHz)	-40 °C to +85 °C , DL = 10 μW
Frequency aging	f_age	±1 × 10^{-6} / year Max. (32≦f≦60 MHz) ±3 × 10^{-6} / year Max. (60<f≦100 MHz)	+25 °C, First year

Product name (Standard form)

FA1210AN ① 32.000000MHz ② 12.0 ③ +10.0-10.0 ④

①Model ②Frequency ③Load capacitance(pF) ④Frequency tolerance(× 10^{-6}, +25 °C)

In addition to the mentioned above specification item, please specify frequency temperature characteristics and operating temperature range in case of inquiry.

External dimensions (Unit:mm)

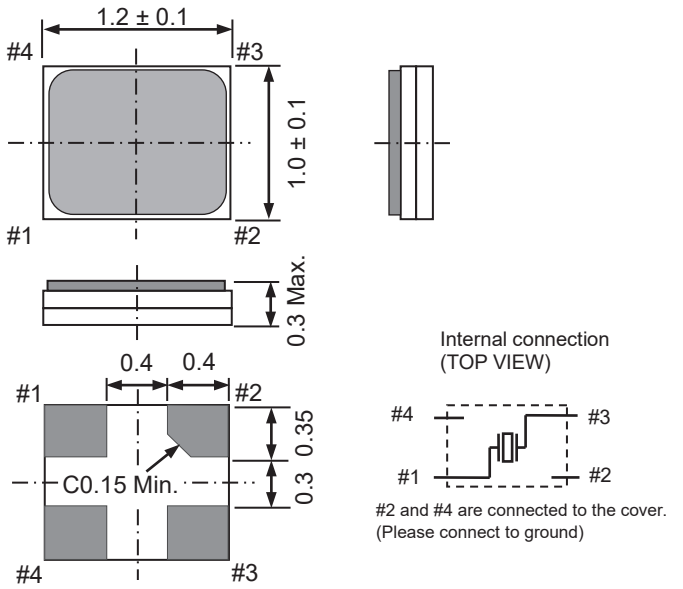

Footprint (Recommended) (Unit:mm)

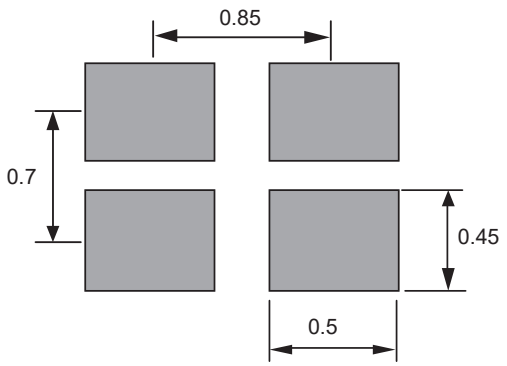

MHz RANGE CRYSTAL UNIT

FA-118T

Product Number
FA-118T : X1E000251xxxx26

- Nominal frequency range : 24 MHz to 54 MHz
- External dimensions : 1.6 × 1.2 × 0.35 mm
- Overtone order : Fundamental
- Applications : Mobile phone, Bluetooth, W-LAN ISM band radio, Clock for MPU

Specifications (characteristics)

Item	Symbol	Specifications		Conditions / Remarks
		For RF Reference	For Clock	
Nominal frequency range	f_nom	24 MHz to 54 MHz		Fundamental Please contact us about available frequencies.
Storage temperature range	T_stg	-40 °C to +125 °C		Storage as single product.
Operating temperature range	T_use	-40 °C to +85 °C		
Level of drive	DL	100 μW Max.	200 μW Max.	Recommended: 10 μW
Frequency tolerance (standard)	f_tol	$\pm 10 \times 10^{-6}$ *1	$\pm 30 \times 10^{-6}$	+25 °C, please contact us for requirements not listed in this specification.
Frequency versus temperature characteristics. (standard)	f_tem	$\pm 12 \times 10^{-6}$ *1	$\pm 30 \times 10^{-6}$	-20 °C to +75 °C, please contact us for requirements not listed in this specification.
Load capacitance	CL	6 pF to ∞		Please specify.
Motional resistance (ESR)	R1	As per table below		-20 °C to +75 °C
Frequency aging	f_age	$\pm 1 \times 10^{-6}$ / year Max.	$\pm 5 \times 10^{-6}$ / year Max.	+25 °C, First year

*1 Please contact us for available frequency tolerances as they are dependent upon the nominal frequency.

Motional resistance (ESR)

Frequency	Motional resistance
24 MHz ≤ f_nom < 32 MHz	200 Ω Max.
32 MHz ≤ f_nom < 36 MHz	100 Ω Max.
36 MHz ≤ f_nom ≤ 54 MHz	80 Ω Max.

Product name (Standard form)

FA-118T	24.000000MHz	12.0	+10.0-10.0
①	②	③	④

①Model ②Frequency ③Load capacitance(pF) ④Frequency tolerance(× 10^{-6}, +25 °C)

In addition to the above mentioned specification item, please specify frequency temperature characteristics and operating temperature range in case of inquiry.

External dimensions (Unit:mm)

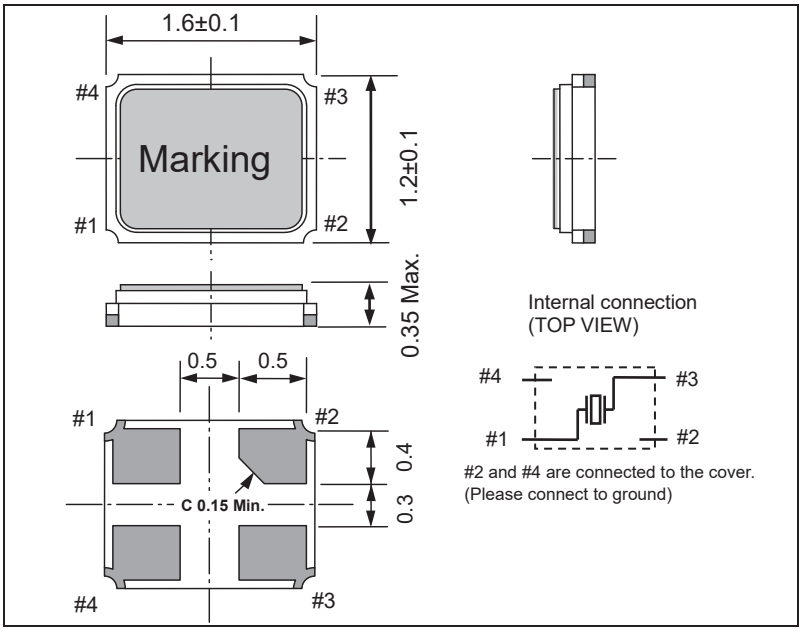

Footprint (Recommended) (Unit:mm)

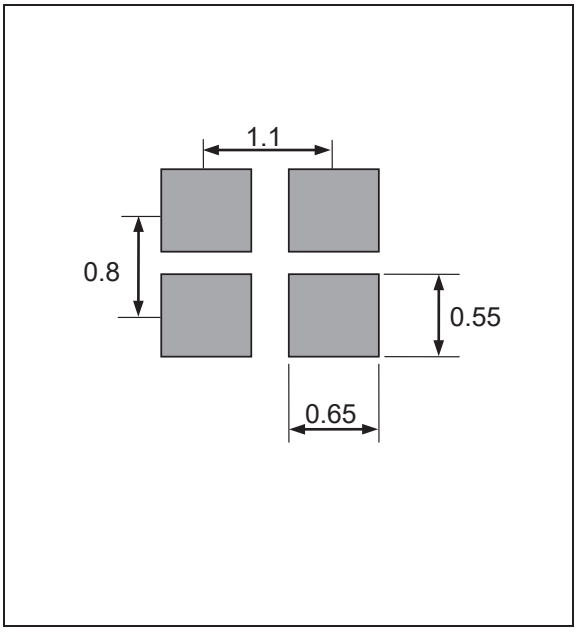

MHz RANGE CRYSTAL UNIT

FA-128

Pb Free
RoHS Compliant

Product Number
Q22FA1280xxxx18

- Nominal frequency range : 16 MHz to 54 MHz
- External dimensions : 2.0 × 1.6 × 0.5 mm
- Overtone order : Fundamental
- Applications : Mobile phone, Bluetooth, W-LAN ISM band radio, Clock for MPU

Specifications (characteristics)

Item	Symbol	Specifications		Conditions / Remarks
		For RF Reference	For Clock	
Nominal frequency range	f_nom	16 MHz to 54 MHz		Fundamental Please contact us about available frequencies.
Storage temperature range	T_stg	-40 °C to +125 °C		Storage as single product.
Operating temperature range	T_use	-40 °C to +85 °C (+105 °C)		Please contact us about +85 °C < T_use
Level of drive	DL	100 μW Max.	200 μW Max.	Recommended: 10 μW
Frequency tolerance (standard)	f_tol	$\pm 10 \times 10^{-6}$ *1	$\pm 30 \times 10^{-6}$	+25 °C, please contact us for requirements not listed in this specification.
Frequency versus temperature characteristics. (standard)	f_tem	$\pm 10 \times 10^{-6}$ *1	$\pm 30 \times 10^{-6}$	-20 °C to +75 °C, please contact us for requirements not listed in this specification.
Load capacitance	CL	6 pF to ∞		Please specify.
Motional resistance (ESR)	R1	As per table below		-20 °C to +75 °C
Frequency aging	f_age	$\pm 1 \times 10^{-6}$ / year Max.	$\pm 5 \times 10^{-6}$ / year Max.	+25 °C, First year

*1 Please contact us for available frequency tolerances as they are dependent upon the nominal frequency.

Motional resistance (ESR)

Frequency	Motional resistance
16 MHz ≤ f_nom < 18 MHz	200 Ω Max.
18 MHz ≤ f_nom < 20 MHz	150 Ω Max.
20 MHz ≤ f_nom < 24 MHz	100 Ω Max.
24 MHz ≤ f_nom < 26 MHz	80 Ω Max.
26 MHz ≤ f_nom ≤ 54 MHz	60 Ω Max.

Product name (Standard form)

FA-128 ① 24.000000MHz ② 12.0 ③ +10.0-10.0 ④

①Model ②Frequency ③Load capacitance(pF) ④Frequency tolerance(× 10^{-6}, +25 °C)

In addition to the above mentioned specification item, please specify frequency temperature characteristics and operating temperature range in case of inquiry.

External dimensions (Unit:mm)

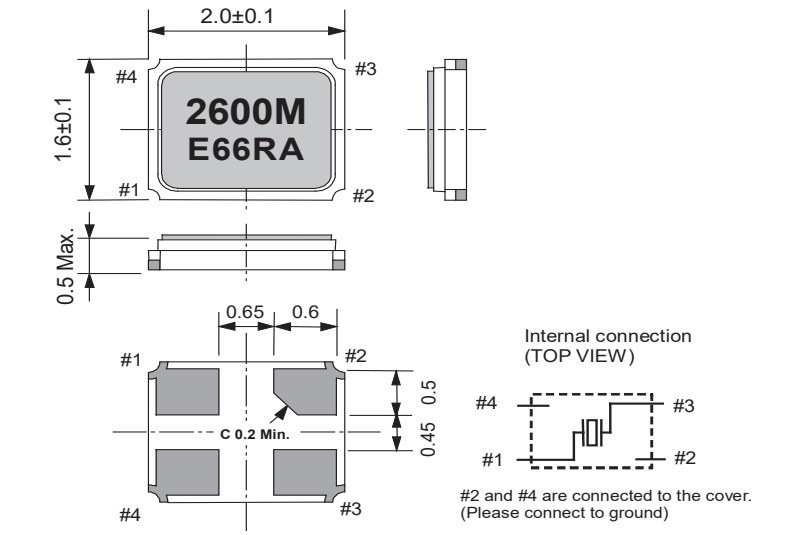

Footprint (Recommended) (Unit:mm)

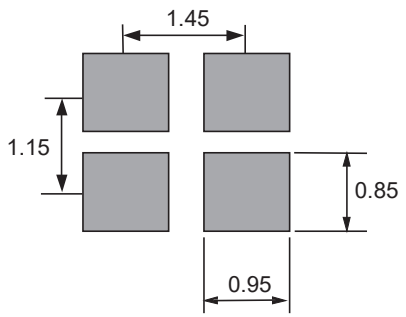

MHz RANGE CRYSTAL UNIT

FA-20H

Pb Free
RoHS Compliant

Product Number
Q24FA20H0xxxx18

- Nominal frequency range : 12 MHz to 54 MHz
- External dimensions : 2.5× 2.0×0.55 mm
- Overtone order : Fundamental
- Applications : Mobile phone, Bluetooth, W-LAN ISM band radio, Clock for MPU

Specifications (characteristics)

Item	Symbol	Specifications		Conditions / Remarks
		For RF Reference	For Clock	
Nominal frequency range	f_nom	12 MHz to 54 MHz		Fundamental Please contact us about available frequencies.
Storage temperature range	T_stg	-40 °C to +125 °C		Storage as single product.
Operating temperature range	T_use	-40 °C to +85 °C (+105 °C)		Please contact us about +85 °C < T_use
Level of drive	DL	100 μW Max.	200 μW Max.	Recommended: 10 μW
Frequency tolerance	f_tol	$\pm10 \times 10^{-6}$	$\pm30 \times 10^{-6}$	+25 °C Please contact us for inquiries.
Frequency versus temperature characteristics	f_tem	$\pm10 \times 10^{-6}$	$\pm30 \times 10^{-6}$	-20 °C to +75 °C Please contact us for inquiries.
Load capacitance	CL	6 pF to ∞		Please specify.
Motional resistance (ESR)	R1	As per table below		-20 °C to +75 °C
Frequency aging	f_age	$\pm1 \times 10^{-6}$ to $\pm3 \times 10^{-6}$ / year Max. *1		+25 °C, First year

*1 Please contact us for available frequency tolerances as they are dependent upon the nominal frequency.

Motional resistance (ESR)

Frequency	Motional resistance
12 MHz ≤ f_nom < 16 MHz	150 Ω Max.
16 MHz ≤ f_nom ≤ 25 MHz	80 Ω Max.
25 MHz < f_nom ≤ 30 MHz	60 Ω Max.
30 MHz < f_nom ≤ 35 MHz	50 Ω Max.
35 MHz < f_nom ≤ 54 MHz	40 Ω Max.

Product name (Standard form)

FA-20H 24.000000MHz 12.0 +10.0-10.0
① ② ③ ④

①Model ②Frequency ③Load capacitance(pF) ④Frequency tolerance(× 10^{-6}, +25 °C)

In addition to the above mentioned specification item, please specify frequency temperature characteristics and operating temperature range in case of inquiry.

External dimensions (Unit:mm)

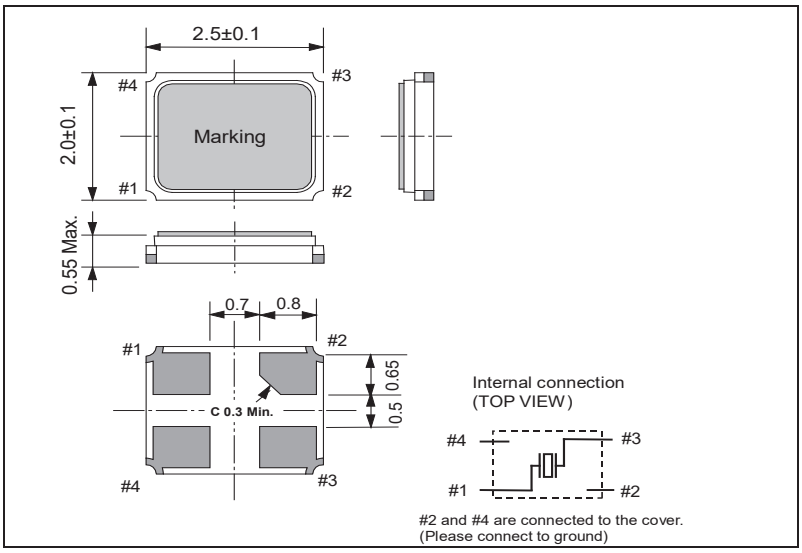

Footprint (Recommended) (Unit:mm)

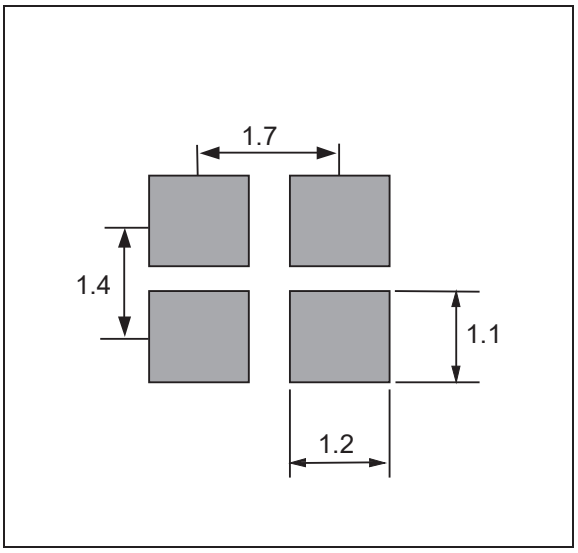

MHz RANGE CRYSTAL UNIT

FA-238V
FA-238
TSX-3225

Pb Free
RoHS Compliant

Product Number
FA-238V : Q22FA23V0xxxx17
FA-238 : Q22FA2380xxxx17
TSX-3225 : X1E000021xxxx17

FA-238V/ FA-238

TSX-3225

- Frequency range : 12 MHz to 50 MHz (FA-238 / FA-238V)
- External dimensions : 3.2 × 2.5 × 0.6 mm ···TSX-3225
  : 3.2 × 2.5 × 0.7 mm ···FA-238V / FA-238
- Overtone order : Fundamental
- Applications : Mobile phone, Bluetooth, W-LAN
  ISM band radio, Clock for MPU

Specifications (characteristics)

Item	Symbol	For Clock		For RF Reference	Conditions / Remarks
		FA-238V	FA-238	TSX-3225	
Nominal frequency range	f_nom	12 MHz to 15.999 MHz	16 MHz to 50 MHz	16 MHz to 48 MHz	Fundamental *1 Please contact us about available frequencies.
Storage temperature	T_stg	-40 °C to +125 °C			Storage as single product.
Operating temperature	T_use	-40 °C to +85 °C (+105 °C)			Please contact us about +85 °C < T_use
Level of drive	DL	200 μW Max.			Recommended: 10 μW
Frequency tolerance	f_tol	±50 × 10^{-6} (standard), (±15 × 10^{-6} to ±50 × 10^{-6} is available)		±10 × 10^{-6}	+25 °C Please contact us for requirements not listed in this specifications. *1
Frequency versus temperature characteristics	f_tem	±30 × 10^{-6}/-20 °C to +70 °C		±10 × 10^{-6}/-20 °C to +75 °C	Please contact us for requirements not listed in this specifications. *1
Load capacitance	CL	7 pF to ∞			Please specify.
Motional resistance (ESR)	R1	As per table below		As per table below	-40 °C to +85 °C, DL = 100 μW
Frequency aging	f_age	±5 × 10^{-6} / year Max.		±1 × 10^{-6} / year Max.*2	+25 °C, First year

*1 FA-238: For over 40 MHz, only the standard specification applies. *2 40 MHz ≤ f_nom : ±2 × 10^{-6} / year Max.

Motional resistance (ESR)

(FA-238V / FA-238) Frequency	Motional resistance
12 MHz ≤ f_nom ≤ 13 MHz	100 Ω Max.
13 MHz < f_nom < 20 MHz	80 Ω Max.
20 MHz ≤ f_nom < 25 MHz	60 Ω Max.
25 MHz ≤ f_nom < 30 MHz	50 Ω Max.
30 MHz ≤ f_nom ≤ 50 MHz	40 Ω Max.

(TSX-3225) Frequency	Motional resistance
16 MHz ≤ f_nom < 21 MHz	60 Ω Max.
21 MHz ≤ f_nom ≤ 48 MHz	40 Ω Max.

Product name (Standard form)

FA-238V	12.000000MHz	12.0	+15.0-15.0
①	②	③	④

①Model ②Frequency ③Load capacitance(pF) ④Frequency tolerance(× 10^{-6}, +25 °C)

In addition to the above mentioned specification item, please specify frequency temperature characteristics and operating temperature range in case of inquiry.

External dimensions

(Unit:mm)

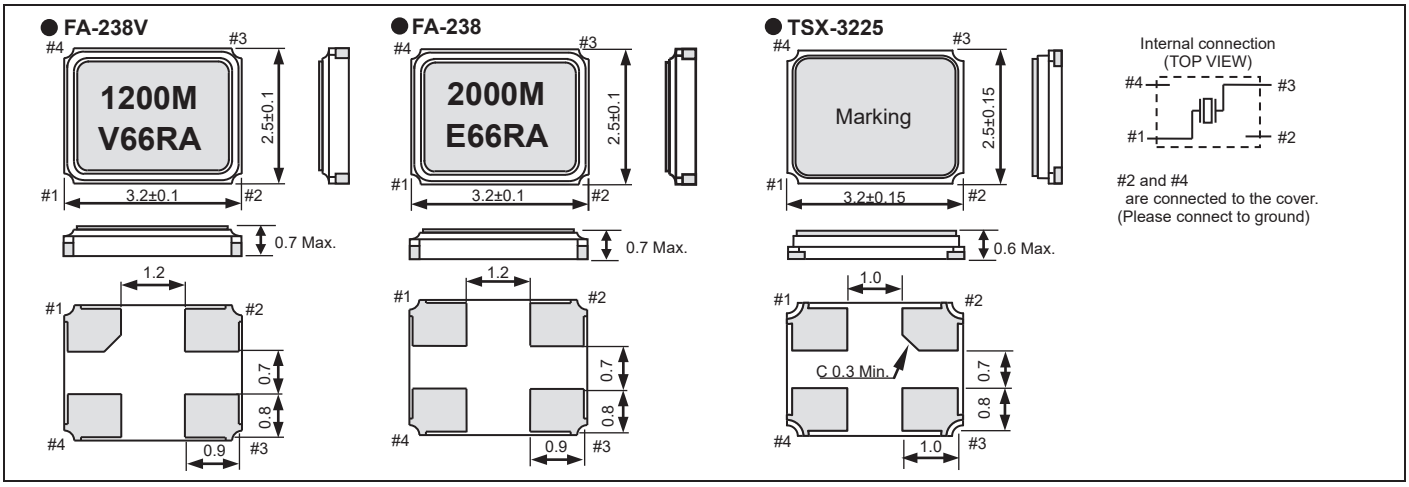

Footprint (Recommended)

(Unit:mm)

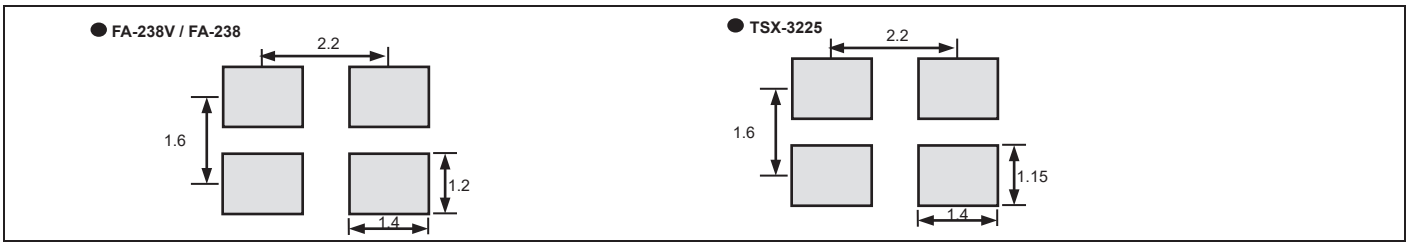

MHz RANGE CRYSTAL UNIT

Built-in thermistor

Product Number
FA1612AS: X1E000401xxxx18

FA1612AS

- Nominal frequency range : 38.4 MHz, 52MHz
- External dimensions : 1.6 × 1.2 × 0.65 mm
- Overtone order : Fundamental
- Applications : Mobile phone, Bluetooth, W-LAN ISM band radio, Clock for MPU GPS, Smart phone

Specifications (characteristics)

Item	Symbol	Specifications	Conditions / Remarks
Nominal frequency range	f_nom	38.4 MHz, 52 MHz	Fundamental Please contact us about available frequencies.
Storage temperature range	T_stg	-40 °C to +125 °C	Storage as single product.
Operating temperature range	T_use	-40 °C to +85 °C	
Level of drive	DL	100 μW Max.	Recommended: 10 μW
Frequency tolerance	f_tol	$\pm 10 \times 10^{-6}$ *1	Please contact us about reference temperature. Please contact us for inquiries.
Frequency versus temperature characteristics	f_tem	$\pm 12 \times 10^{-6}$ *1	-30 °C to +85 °C Please contact us for inquiries.
Load capacitance	CL	6 pF to ∞	Please specify.
Motional resistance (ESR)	R1	50 Ω Max. (38.4 MHz) 30 Ω Max. (52 MHz)	-30 °C to +85 °C
Frequency aging	f_age	$\pm 1 \times 10^{-6}$ / year Max.	+25 °C, First year
Thermistor resistance	—	Please contact us about specifications.	
Thermistor B constant	—		

*1 Please contact us for available frequency tolerances as they are dependent upon the nominal frequency.

Product name (Standard form)

FA1612AS	38.400000MHz	7.0	+10.0-10.0
①	②	③	④

①Model ②Frequency ③Load capacitance(pF) ④Frequency tolerance(× 10^{-6}, +25 °C)

In addition to the above mentioned specification item, please specify frequency temperature characteristics and operating temperature range in case of inquiry.

External dimensions (Unit:mm)

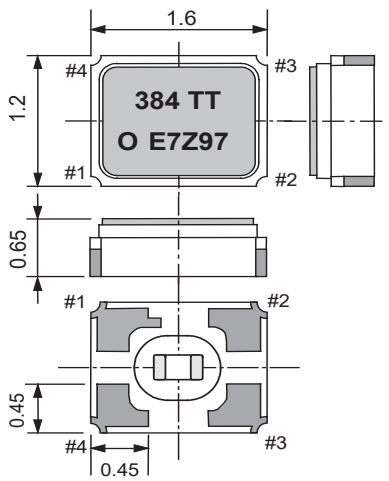

Internal connection (TOP VIEW)

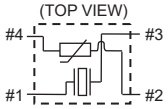

Pin map

Pin	connection
1	Crystal
2	GND, thermistor
3	Crystal
4	thermistor

Footprint (Recommended) (Unit:mm)

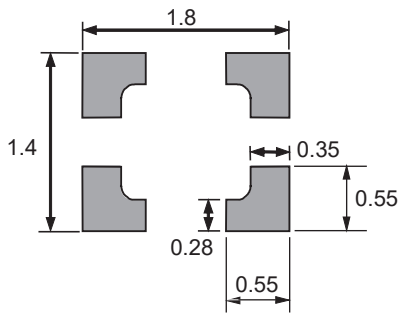

MHz RANGE CRYSTAL UNIT

Built-in thermistor

Product Number
FA2016AS: X1E000371xxxx18

FA2016AS

- Nominal frequency range : 38.4 MHz
- External dimensions : 2.0 × 1.6 × 0.65 mm
- Overtone order : Fundamental
- Applications : Mobile phone, Bluetooth, W-LAN ISM band radio, Clock for MPU GPS, Smart phone

Specifications (characteristics)

Item	Symbol	Specifications	Conditions / Remarks
Nominal frequency range	f_nom	38.4 MHz	Fundamental Please contact us about available frequencies.
Storage temperature range	T_stg	-40 °C to +125 °C	Storage as single product.
Operating temperature range	T_use	-40 °C to +85 °C	
Level of drive	DL	100 μW Max.	Recommended: 10 μW
Frequency tolerance	f_tol	$\pm 10 \times 10^{-6}$ *1	Please contact us about reference temperature. Please contact us for inquiries.
Frequency versus temperature characteristics	f_tem	$\pm 12 \times 10^{-6}$ *1	-30 °C to +85 °C Please contact us for inquiries.
Load capacitance	CL	6 pF to ∞	Please specify.
Motional resistance (ESR)	R1	50 Ω Max.	-30 °C to +85 °C
Frequency aging	f_age	$\pm 1 \times 10^{-6}$ / year Max.	+25 °C, First year
Thermistor resistance	—	Please contact us about specifications.	
Thermistor B constant	—		

*1 Please contact us for available frequency tolerances as they are dependent upon the nominal frequency.

Product name (Standard form)

FA2016AS ① 38.400000MHz ② 7.0 ③ +10.0-10.0 ④

①Model ②Frequency ③Load capacitance(pF) ④Frequency tolerance(× 10^{-6}, +25 °C)

In addition to the above mentioned specification item, please specify frequency temperature characteristics and operating temperature range in case of inquiry.

External dimensions (Unit:mm)

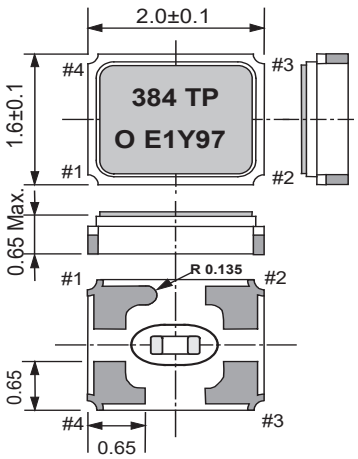

Internal connection (TOP VIEW)

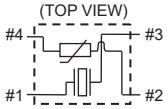

Pin map

Pin	connection
1	Crystal
2	GND, thermistor
3	Crystal
4	thermistor

Footprint (Recommended) (Unit:mm)

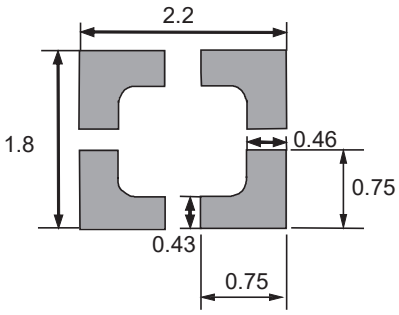

Crystal Oscillator (SPXO / SPSO) CMOS Output

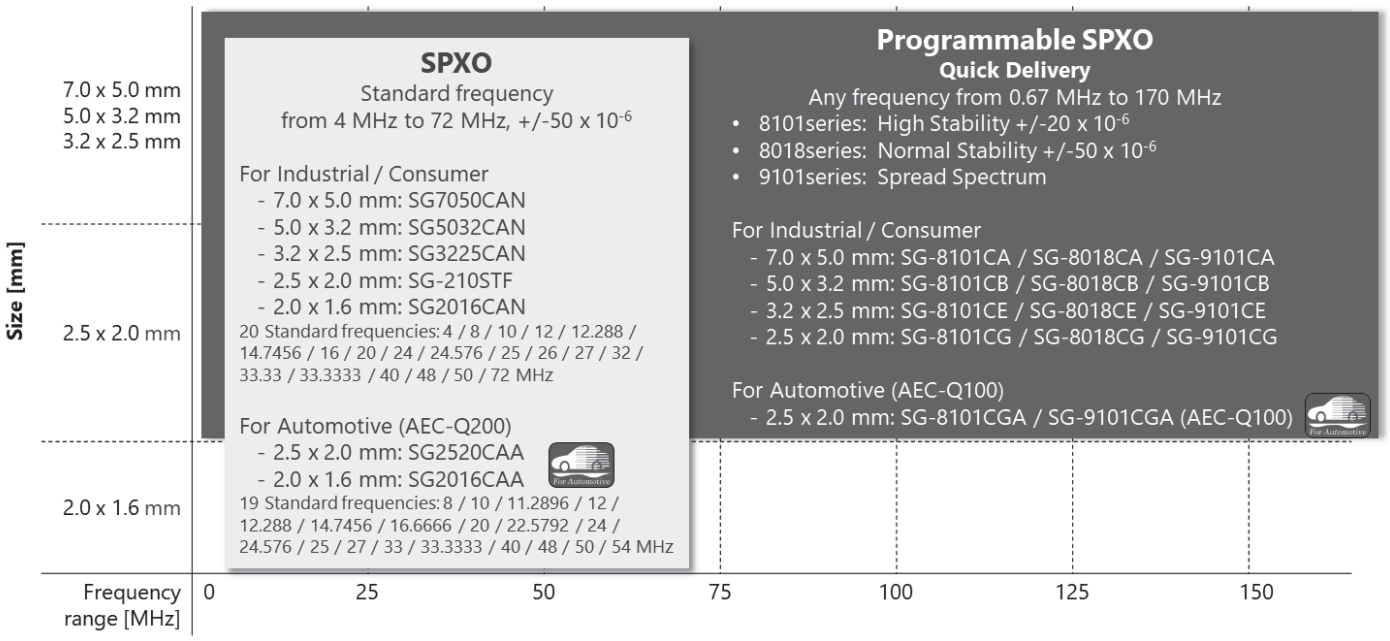

►Fixed-Frequency SPXO

P	Model		Size [mm]	Nominal frequency range	Frequency Tolerance [x 10^{-6}]	Operating temperature [°C]	Supply voltage [V]	Current consumption Max. [mA]	Output load condition [pF]	Output control
51	**SG2016CAN** **SG-210STF** **SG3225CAN** **SG5032CAN** **SG7050CAN**		2.0 x 1.6 x 0.7t 2.5 x 2.0 x 0.8t 3.2 x 2.5 x 1.05t 5.0 x 3.2 x 1.1t 7.0 x 5.0 x 1.3t	4 MHz 72 MHz 20 standard frequencies	±25 ±50 ±50, ±100	-20 to +70 -40 to +85 -40 to +105	1.6 to 2.2	2.4	15	$\overline{ST}$
							2.2 to 2.7	2.8		
							2.7 to 3.6	3.0		
Web Site	**SG5032CCN** **SG7050CCN**		5.0 x 3.2 x 1.1t 7.0 x 5.0 x 1.3t	2.5 MHz 50 MHz	±50	-40 to +85	4.5 to 5.5	20.0	50	OE
120	**SG2016CAA** **(AEC-Q200)**		2.0 x 1.6 x 0.7t 2.5 x 2.0 x 0.8t	8 MHz 54 MHz 19 standard frequencies	±50, ±100 ±50, ±100 ±100, ±150	-40 to +85 -40 to +105 -40 to +125	1.6 to 2.2	2.9	15	$\overline{ST}$
							2.2 to 2.7	3.3		
120	**SG2520CAA** **(AEC-Q200)**						2.7 to 3.6	3.5		
Web site	**SG-210S*BA** **(AEC-Q200)**	SEBA	2.5 x 2.0 x 0.8t	2 MHz 60 MHz	±50, ±100 ±50, ±100 ±50, ±100 ±100, ±150	-20 to +70 -40 to +85 -40 to +105 -40 to +125	1.6 to 2.2	2.0	15	$\overline{ST}$
		SDBA					2.2 to 3.0	3.0		
		SCBA					2.7 to 3.6	4.0		

►Fixed-Frequency SPSO

P	Model	Size [mm]	Nominal frequency range	Frequency Tolerance [x 10^{-6}]	Operating temperature [°C]	Supply voltage [V]	Current consumption Max. [mA]	Output load condition [pF]	Output control
Web Site	**EG-2021CA**	7.0 x 5.0 x 1.2t	62.5 MHz 250 MHz	±50 ±100	0 to +70 -5 to +85	2.5 ± 0.125	30	15	OE
	EG-2001CA		106.25 MHz 170 MHz	±50 ±100	0 to +70	3.3 ± 0.3	50	15	
	EG-2002CA		62.5 MHz 170 MHz	±50 ±100	0 to +70	3.3 ± 0.3	60	15 (LV-TTL)	

►Programmable SPXO

P	Model		Size [mm]	Nominal frequency range	Frequency Tolerance [x 10^{-6}]	Operating temperature [°C]	Supply voltage [V]	Current consumption Max. [mA]	Output load condition [pF]	Output control
53 to 54	**SG-8018CG** **SG-8018CE** **SG-8018CB** **SG-8018CA**		2.5 x 2.0 x 0.7t 3.2 x 2.5 x 1.05t 5.0 x 3.2 x 1.1t 7.0 x 5.0 x 1.3t	0.67 MHz 170 MHz	±50	-40 to +105	1.62 to 1.98	5.5	15	OE or $\overline{ST}$
							1.98 to 2.2	5.8		
							2.2 to 2.8	6.7		
							2.7 to 3.63	8.1		
55 to 56	**SG-8101CG** **SG-8101CE** **SG-8101CB** **SG-8101CA**		2.5 x 2.0 x 0.7t 3.2 x 2.5 x 1.05t 5.0 x 3.2 x 1.1t 7.0 x 5.0 x 1.3t	0.67 MHz 170 MHz	±15 ±20 / ±50	-40 to +85 -40 to +105	1.62 to 1.98	5.5	15	OE or $\overline{ST}$
							1.98 to 2.20	5.8		
							2.20 to 2.80	6.7		
							2.70 to 3.63	8.1		
121	**SG-8101CGA** **(AEC-Q100)**		2.5 x 2.0 x 0.7t	0.67 MHz 170 MHz	±15 ±20 ±50 / ±100	-40 to +85 -40 to +105 -40 to +125	1.62 to 1.98	5.5		
							1.98 to 2.20	5.8		
							2.20 to 2.80	6.7		
							2.70 to 3.63	8.1		
Web Site	**SG-8002CE**	PT / ST	3.2 x 2.5 x 1.05t	1 MHz 125 MHz	B, C, M	-20 to +70 -40 to +85	4.5 to 5.5	40	5 TTL	P*: OE S*: $\overline{ST}$
		PH / SH								
		PC / SC		1 MHz 125 MHz (2.7 V to 3.6 V: 1 MHz to 66.7 MHz)	B, C, M	-20 to +70 -40 to +85	3.0 to 3.6 (2.7 to 3.6)	28	15	
	SG-8002CA	PT / ST	7.0 x 5.0 x 1.4t	1 MHz 125 MHz	B, C, M	-20 to +70 -40 to +85	4.5 to 5.5	40	5 TTL	
		PH / SH								
		PC / SC		1 MHz 125 MHz (2.7 V to 3.6 V: 1 MHz to 66.7 MHz)	B, C, M	-20 to +70 -40 to +85	3.0 to 3.6 (2.7 to 3.6)	28	15	
	SG-8002JC	PT / ST	10.5 x 5.8 x 2.7t	1 MHz 125 MHz	B, C	-20 to +70	4.5 to 5.5	40	5 TTL	
		PH / SH								
		PC / SC		1 MHz 125 MHz (2.7 V to 3.6 V: 1 MHz to 66.7 MHz)	B, C	-20 to +70	3.0 to 3.6 (2.7 to 3.6)	28	15	
	SG-8002JA	PT / ST	14.0 x 9.8 x 4.7t	1 MHz 125 MHz	B, C, M	-20 to +70 -40 to +85	4.5 to 5.5	40	5 TTL	
		PH / SH								
		PC / SC		1 MHz 125 MHz (2.7 V to 3.6 V: 1 MHz to 66.7 MHz)	B, C, M	-20 to +70 -40 to +85	3.0 to 3.6 (2.7 to 3.6)	28	15	
	SG-8002DC	PT / ST	DIP half size	1 MHz 125 MHz	B, C, M	-20 to +70 -40 to +85	4.5 to 5.5	40	5 TTL	
		PH / SH								
		PC / SC		1 MHz 125 MHz (2.7 V to 3.6 V: 1 MHz to 66.7 MHz)	B, C, M	-20 to +70 -40 to +85	3.0 to 3.6 (2.7 to 3.6)	28	15	

*SG-8002 Series: B: ±50 x 10^{-6}(-20 °C to +70 °C), C: ±100 x 10^{-6} (-20 °C to +70 °C), M: ±100 x 10^{-6} (-40 °C to +85 °C), L: ±50 x 10^{-6} (-40 °C to +85 °C)

►Programmable SPXO, Spread Spectrum

P	Model	Size [mm]	Nominal frequency range	Spread Spectrum Configuration [%] Upper: Center Lower: Down	Operating temperature [°C]	Supply voltage [V]	Current consumption Max. [mA]	Output load condition [pF]	Output control
57 to 58	**SG-9101CG** **SG-9101CE** **SG-9101CB** **SG-9101CA**	2.5 x 2.0 x 0.7t 3.2 x 2.5 x 1.05t 5.0 x 3.2 x 1.1t 7.0 x 5.0 x 1.3t	0.67 MHz — 170 MHz	±0.25 to ±2.0	-40 to +85 -40 to +105	1.62 to 1.98	5.7	15	OE or $\overline{ST}$
						1.98 to 2.20	6.0		
				-0.5 to -4.0		2.20 to 2.80	6.9		
						2.70 to 3.63	8.3		
Auto	**SG-9101CGA** **(AEC-Q100)**	2.5 x 2.0 x 0.7t	0.67 MHz — 170 MHz	±0.25 to ±2.0 -0.5 to -4.0	-40 to +125	1.62 to 1.98	5.8		
						1.98 to 2.20	6.1		
						2.20 to 2.80	7.0		
						2.70 to 3.63	8.4		

Spread Spectrum Configuration Center [%]	±0.25	±0.5	±0.75	±1.0	±1.5	±2.0
Spread Spectrum Configuration Down [%]	-0.5	-1.0	-1.5	-2.0	-3.0	-4.0

►Programming tool for Programmable SPXO

P	Model
59	**SG-8000 series Programming Tool (SG-Writer II)**

Crystal Oscillator (SPXO / SPSO) Differential Output

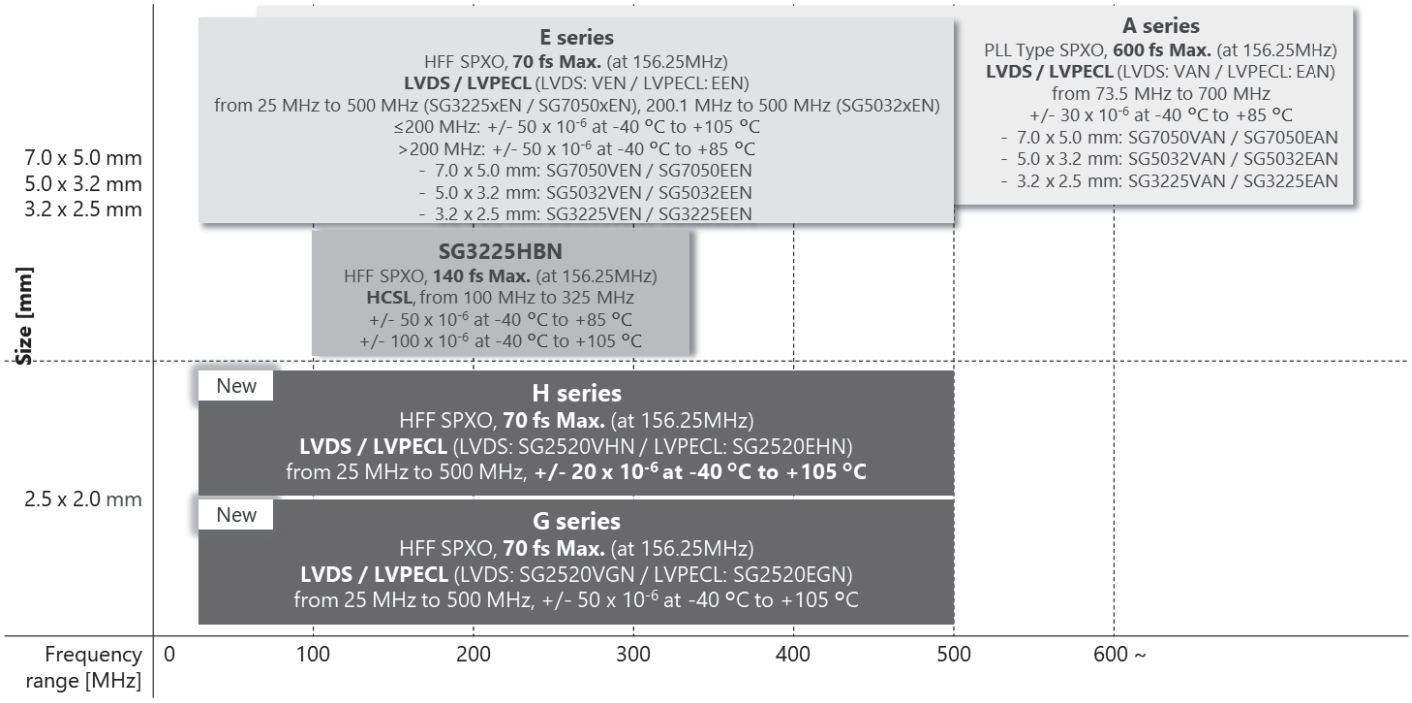

► SPXO

P	Model		Size [mm]	Nominal frequency range	Frequency Tolerance [x 10^{-6}]	Operating temperature [°C]	Supply voltage [V]	Current consumption Max. [mA]	Output load condition [Ω]	Phase Jitter Max. (Bandwidth: 12 kHz to 20 MHz) [fs]
60	**SG2520EHN**	**LV-PECL**	2.5 x 2.0 x 0.74t	25 MHz 500 MHz	±20	-40 to +85 -40 to +105	2.5 ± 0.125 3.3 ± 0.165	60	50	90 (fo = 100.00 MHz) 70 (fo = 156.25 MHz) 60 (fo = 212.50 MHz) 50 (fo = 491.52 MHz)
	SG2520VHN	**LVDS**					1.8 ± 0.090 2.5 ± 0.125 3.3 ± 0.165	25	100	100 (fo = 100.00 MHz) 60 (fo = 156.25 MHz) 50 (fo = 212.50 MHz) 50 (fo = 491.52 MHz) *Supply voltage = 2.5 V, 3.3 V
61	**SG2520EGN**	**LV-PECL**	2.5 x 2.0 x 0.74t	25 MHz 500 MHz	±25 ±50	-40 to +85 -40 to +105	2.5 ± 0.125 3.3 ± 0.165	60	50	90 (fo = 100.00 MHz) 70 (fo = 156.25 MHz) 60 (fo = 212.50 MHz) 50 (fo = 491.52 MHz)
	SG2520VGN	**LVDS**					1.8 ± 0.090 2.5 ± 0.125 3.3 ± 0.165	25	100	100 (fo = 100.00 MHz) 60 (fo = 156.25 MHz) 50 (fo = 212.50 MHz) 50 (fo = 491.52 MHz) *Supply voltage = 2.5 V, 3.3 V
62	**SG3225EEN** **SG5032EEN** **SG7050EEN**	**LV-PECL**	3.2 x 2.5 x 1.05t 5.0 x 3.2 x 1.3t 7.0 x 5.0 x 1.4t	25 MHz 500 MHz (SG3225xEN, SG7050xEN)	±25 ±50 ±100	-40 to +85 -40 to +105	2.5 ± 0.125 3.3 ± 0.165	60	50	100 (fo = 100.00 MHz) 70 (fo = 156.25 MHz) 60 (fo = 212.50 MHz) 40 (fo = 491.52 MHz)
	SG3225VEN **SG5032VEN** **SG7050VEN**	**LVDS**		200.1 MHz 500 MHz (SG5032xEN)				25	100	150 (fo = 100.00 MHz) 90 (fo = 156.25 MHz) 80 (fo = 212.50 MHz) 60 (fo = 491.52 MHz)
63	**SG3225EAN** **SG5032EAN** **SG7050EAN**	**LV-PECL**	3.2 x 2.5 x 1.05t 5.0 x 3.2 x 1.0t 7.0 x 5.0 x 1.4t	73.5 MHz 700 MHz	±20 ±30 ±50	-20 to +70 -40 to +85	2.375 to 3.63	65	50	600 (none of the following fo) 900 (fo = 243 MHz to 250 MHz, 486 MHz to 500 MHz)
	SG3225VAN **SG5032VAN** **SG7050VAN**	**LVDS**						30	100	
64	**SG3225HBN**	**HCSL**	3.2 x 2.5 x 1.05t	100 MHz 325 MHz	±50 ±100	-40 to +85 -40 to +105	3.3 ± 0.33	35	50	180 (fo = 100.00 MHz) 140 (fo = 156.25 MHz) 125 (fo = 200.00 MHz) 110 (fo = 322.27 MHz)

►SPSO

P	Model		Size [mm]	Nominal frequency range	Frequency Tolerance [x 10^{-6}]	Operating temperature [°C]	Supply voltage [V]	Current consumption Max. [mA]	Output load condition [Ω]	Phase Jitter Max. (Bandwidth: 12 kHz to 20 MHz) [fs]
Web Site	**EG-2121CB**	**LV-PECL**	5.0 x 3.2 x 1.4t	100 MHz 700 MHz	±50 ±100	0 to +70 -5 to +85 -20 to +70	2.5 ± 0.125	60	50	LV-PECL / LVDS 230 / 270 (fo = 100 MHz to 150 MHz) 220 / 240 (fo = 150 MHz to 200 MHz) 210 / 230 (fo = 200 MHz to 300 MHz) 180 / 190 (fo = 300 MHz to 400 MHz) 160 / 160 (fo = 400 MHz to 500 MHz) 140 / 140 (fo = 500 MHz to 600 MHz) 100 / 100 (fo = 600 MHz to 700 MHz)
		LVDS						30	100	
	EG-2102CB	**LV-PECL**					3.3 ± 0.33	60	50	
		LVDS						30	100	
	EG-2123CB	**LV-PECL**					2.5 ± 0.125	60	50	
		LVDS						30	100	
	EG-2103CB	**LV-PECL**			±100		3.3 ± 0.33	60	50	
		LVDS						30	100	
	XG5032HAN	**HCSL**		100 MHz 200 MHz	±50 ±100		2.5 ± 0.125 3.3 ± 0.33	35	50	300 (fo = 100 MHz to 160 MHz) 400 (fo = 160 MHz to 175 MHz) 200 (fo = 175 MHz to 200 MHz)
	XG-2121CA	**LV-PECL**	7.0 x 5.0 x 1.2t	100 MHz 700 MHz	±50 ±100	0 to +70 -5 to +85 -20 to +70	2.5 ± 0.125	60	50	LV-PECL / LVDS 230 / 270 (fo = 100 MHz to 150 MHz) 220 / 240 (fo = 150 MHz to 200 MHz) 210 / 230 (fo = 200 MHz to 300 MHz) 180 / 190 (fo = 300 MHz to 400 MHz) 160 / 160 (fo = 400 MHz to 500 MHz) 140 / 140 (fo = 500 MHz to 600 MHz) 100 / 100 (fo = 600 MHz to 700 MHz)
		LVDS						30	100	
	XG-2102CA	**LV-PECL**					3.3 ± 0.33	60	50	
		LVDS						30	100	
	XG-2123CA	**LV-PECL**			±100		2.5 ± 0.125	60	50	
		LVDS						30	100	
	XG-2103CA	**LV-PECL**					3.3 ± 0.33	60	50	
		LVDS						30	100	
	EG-4121CA	**LV-PECL**	7.0 x 5.0 x 1.2t	100 MHz 700 MHz	±50	-40 to +85	2.5 ± 0.125	80	50	LV-PECL / LVDS 230 / 270 (fo = 100 MHz to 150 MHz) 220 / 240 (fo = 150 MHz to 200 MHz) 210 / 230 (fo = 200 MHz to 300 MHz) 180 / 190 (fo = 300 MHz to 400 MHz) 160 / 160 (fo = 400 MHz to 500 MHz) 140 / 140 (fo = 500 MHz to 600 MHz) 100 / 100 (fo = 600 MHz to 700 MHz) HCSL 300 (fo = 100 MHz to 160 MHz) 400 (fo = 160 MHz to 175 MHz) 200 (fo = 175 MHz to 200 MHz)
		LVDS						30	100	
		HCSL		100 MHz 200 MHz				75	50	
	EG-4101CA	**LV-PECL**		100 MHz 700 MHz			3.3 ± 0.33	85	50	
		LVDS						40	100	
		HCSL		100 MHz 200 MHz				85	50	
	MG7050EAN (Multi output)	**LV-PECL**	7.0 x 5.0 x 1.6t	100 MHz 700 MHz	±50 ±100	0 to +70 -5 to +85 -20 to +70	2.5 ± 0.125	94 (2out) 170 (4out)	50	170 / 140 (fo = 100.00 MHz) 150 / 120 (fo = 156.25 MHz) 110 / 100 (fo = 312.50 MHz) 50 / 50 (fo = 700.00 MHz) (Left: 2.5 V / Right: 3.3 V)
							3.3 ± 0.33	102 (2out) 184 (4out)		
	MG7050VAN (Multi output)	**LVDS**	7.0 x 5.0 x 1.6t				2.5 ± 0.125	50 (2out) 66 (4out)	100	190 / 160 (fo = 100.00 MHz) 170 / 140 (fo = 156.25 MHz) 120 / 110 (fo = 312.50 MHz) 60 / 50 (fo = 700.00 MHz) (Left: 2.5 V / Right: 3.3 V)
							3.3 ± 0.33	56 (2out) 72 (4out)		
	MG7050HAN (Multi output)	**HCSL**	7.0 x 5.0 x 1.6t	100 MHz 200 MHz			2.5 ± 0.125	84 (2out) 128 (4out)	50 or 42.2	190 / 160 (fo = 100.00 MHz) 180 / 150 (fo = 125.00 MHz) 160 / 130 (fo = 156.25 MHz) 140 / 120 (fo = 200.00 MHz) (Left: 2.5 V / Right: 3.3 V)
							3.3 ± 0.33	90 (2out) 136 (4out)		
	EA-2102CB (AEC-Q200)	**LV-PECL**	5.0 x 3.2 x 1.35t	• 100 MHz	±300	-40 to +85	3.3 ± 0.3	80	50	1 000

►Programmable SPXO (Output: LV-PECL)

P	Model	Size [mm]	Nominal frequency range	Frequency Tolerance [x 10^{-6}]	Operating temperature [°C]	Supply voltage [V]	Current consumption Max. [mA]	Output load condition [Ω]	Phase Jitter Max. (Bandwidth: 12 kHz to 20 MHz) [fs]
65 to 66	**SG-8506CA (I2C-Bus, Programmable, 8 pin)**	7.0 x 5.0 x 1.5t	50 MHz 800 MHz	±31.5 ±50	-40 to +85	2.5 ± 0.125	90	50	300
						3.3 ± 0.33			
67 to 68	**SG-8503CA (Dual Selectable, 6 pin)**					2.5 ± 0.125			
						3.3 ± 0.33			
	SG-8504CA (Quad Selectable, 8 pin)					2.5 ± 0.125			
						3.3 ± 0.33			

CRYSTAL OSCILLATOR (SPXO)
OUTPUT : CMOS

SG2016 / 3225 / 5032 / 7050CAN
SG-210STF

Product Number (please contact us)
SG2016CAN: X1G004801xxxx00
SG-210STF: X1G004171xxxx00
SG3225CAN: X1G005961xxxx15
SG5032CAN: X1G004451xxxx00
SG7050CAN: X1G004481xxxx00

- Frequency : 20 standard frequencies
- Supply voltage : 1.8 V to 3.3 V Typ.
- Function : Standby($\overline{ST}$)
- Operating temperature : -40 °C to +105 °C

SG2016CAN (2.0 x 1.6 mm) | SG-210STF (2.5 x 2.0 mm) | SG3225CAN (3.2 x 2.5 mm) | SG5032CAN (5.0 x 3.2 mm) | SG7050CAN (7.0 x 5.0 mm)

Specifications (characteristics)

Item	Symbol	Specifications			Conditions / Remarks	
Output frequency	fo	4 MHz, 8 MHz, 10 MHz, 12 MHz, 12.288 MHz, 14.7456 MHz, 16 MHz, 20 MHz, 24 MHz, 24.576 MHz, 25 MHz, 26 MHz, 27 MHz, 32 MHz, 33.33 MHz, 33.3333 MHz, 40 MHz, 48 MHz, 50 MHz, 72 MHz				
Supply voltage	V_{CC}	1.60 V to 3.63 V			4 MHz ≤ fo ≤ 50 MHz, T_use = +105 °C Max.	Refer to Figure 1
		1.71 V to 3.63 V			fo = 72 MHz, T_use = +85 °C Max.	
		2.25 V to 3.63 V			fo = 72 MHz, T_use = +105 °C Max.	
Storage temperature	T_stg	-55 °C to +125 °C			SG2016CAN, SG3225CAN	
		-40 °C to +125 °C			All others	
Operating temperature	T_use	-20 °C to +70 °C, -40 °C to +85 °C, -40 °C to +105 °C			See of figure *1	
Frequency tolerance	f_tol	±25 × 10^{-6}			-20 °C to +70 °C	
		±50 × 10^{-6}			-40 °C to +85 °C, -40 °C to +105 °C	
Current consumption	I_{CC}	V_{CC} = 1.8 V ± 10 %	V_{CC} = 2.5 V ± 10 %	V_{CC} = 3.3 V ± 10 %		
		1.5 mA Max.	1.6 mA Max.	1.8 mA Max.	No load condition, 4 MHz ≤ fo ≤ 20 MHz	
		1.8 mA Max.	2.0 mA Max.	2.2 mA Max.	No load condition, 20 MHz < fo ≤ 40 MHz	
		2.1 mA Max.	2.4 mA Max.	2.6 mA Max.	No load condition, 40 MHz < fo ≤ 50 MHz	
		2.4 mA Max.	2.8 mA Max.	3.0 mA Max.	No load condition, fo = 72 MHz	
Stand-by current	I_std	2.1 µA Max.	2.5 µA Max.	2.7 µA Max.	$\overline{ST}$ =GND	
Symmetry	SYM	45 % to 55 %			50 % V_{CC} level, L_CMOS ≤ 15 pF	
Output voltage	V_{OH}	90 % V_{CC} Min.				
	V_{OL}	10 % V_{CC} Max.				
	V_{OH-2}	V_{CC} - 0.4 V Min.				
	V_{OL-2}	0.4 V Max.				
Output load condition (CMOS)	L_CMOS	15 pF Max.				
Input voltage	V_{IH}	80 % V_{CC} Min.			$\overline{ST}$ terminal	
	V_{IL}	20 % V_{CC} Max.				
Rise time and Fall time	tr / tf	3 ns Max. 3.5 ns Max. (@1.8 V±10 %)			20 % V_{CC} to 80 % V_{CC} level, L_CMOS = 15 pF	
Start-up time	t_str	3 ms Max.			T = 0 at 90 % V_{CC}	
Frequency aging	f_age	±3 × 10^{-6} / year Max.			+25 °C, First year	

	1.8 V ± 10 %	2.5 V ± 10 %	3.3 V ± 10 %
I_{OH}	-1.5 mA	-3 mA	-4 mA
I_{OL}	1.5 mA	3 mA	4 mA

	1.8 V±10 %	2.5 V±10 %	3.3 V±10 %
I_{OH}	-3 mA	-4 mA	-6 mA
I_{OL}	3 mA	4 mA	6 mA

[Model : SG2016 / 3225 / 5032 / 7050CAN]

Product name SG2016 C AN 25.000000MHz T J H A
(Standard form) ① ② ③ ④⑤⑥⑦
①Model ②Output(C: CMOS) ③Frequency ④Supply voltage
⑤Frequency tolerance ⑥Operating temperature range
⑦Internal identification code("A" is default)

④Supply voltage *See Figure 1	
T	1.8 V to 3.3 V Typ.
K	2.5 V to 3.3 V Typ.

⑤Frequency tolerance / ⑥Operating temperature range	
DB*	±25 × 10^{-6} / -20 °C to +70 °C
JG	±50 × 10^{-6} / -40 °C to +85 °C
JH	±50 × 10^{-6} / -40 °C to +105 °C

* Please refer to Product number list on Full Data Sheet for available frequencies

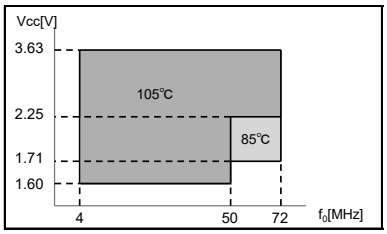

Figure 1 : The upper limit of Operating temperature and the related conditions

Please note that Supply voltage range (V_{CC}) depends on Output frequency (fo) and upper limit of Operationg temperature (T_use Max.).

[Model : SG-210STF]

Product name SG-210 S T F 25.000000MHz Y
(Standard form) ① ②③ ④ ⑤
①Model ②Function(S:Standby) ③Supply voltage
④Frequency ⑤Frequency tolerance

③Supply voltage *See Figure 1	
T	1.8 V to 3.3 V Typ.

⑤Frequency tolerance	
S*	±25 × 10^{-6} / -20 °C to +70 °C
L	±50 × 10^{-6} / -40 °C to +85 °C
Y	±50 × 10^{-6} / -40 °C to +105 °C

* Please refer to Product number list on Full Data Sheet for available frequencies

External dimensions (Unit:mm)

SG2016CAN

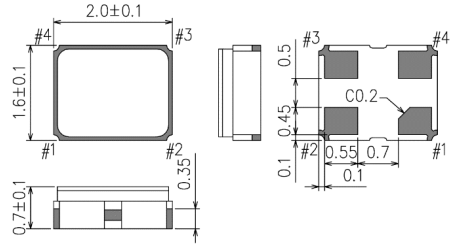

SG-210STF

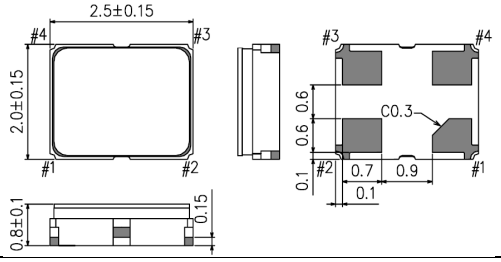

SG3225CAN

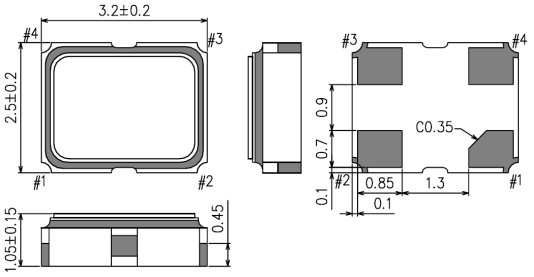

SG5032CAN

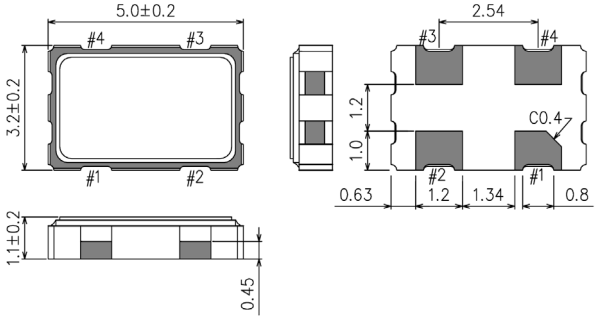

SG7050CAN

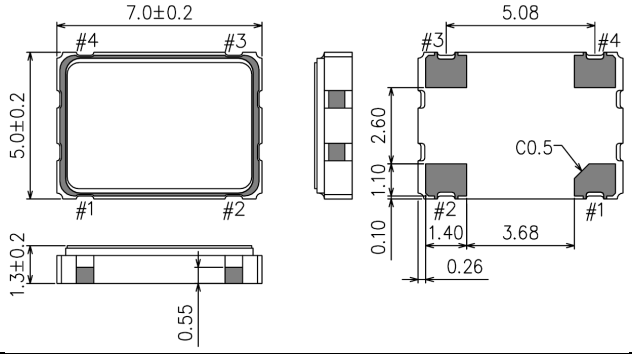

Footprint (Recommended) (Unit:mm)

SG2016CAN

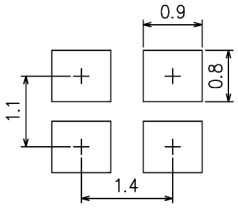

SG-210STF

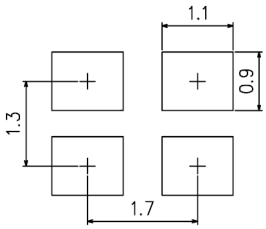

SG3225CAN

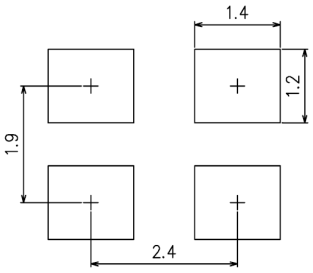

SG5032CAN

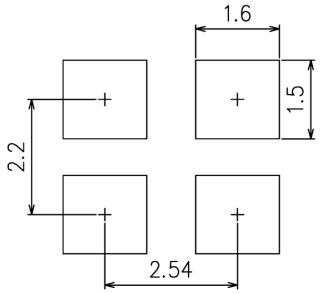

SG7050CAN

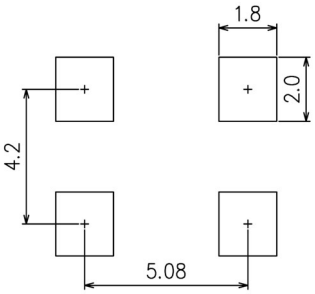

Pin Map

Pin	Connection	Function
1	$\overline{ST}$	$\overline{ST}$ terminal $\overline{ST}$ function / Oscillator circuit / Output HIGH or "open" / Oscillation / Specified frequency: Enable LOW / Oscillation stop / High impedance: Disable
2	GND	Ground
3	OUT	Clock output
4	V_{CC}	Power supply

■**Notes:** To maintain stable operation, provide a 0.01uF to 0.1uF by-pass capacitor at a location as near as possible to the power source terminal of the crystal product (between Vcc - GND).

CRYSTAL OSCILLATOR (Programmable)
OUTPUT: CMOS

SG-8018 series

Pb Free
RoHS Compliant

Product Number
SG-8018CG: X1G005601xxxx00
SG-8018CE: X1G005591xxxx00
SG-8018CB: X1G005581xxxx00
SG-8018CA: X1G005571xxxx00

- Frequency range : 0.67 MHz to 170 MHz (1 ppm Step)
- Supply voltage : 1.62 V to 3.63 V
- Function : Output enable (OE) or Standby ($\overline{ST}$)
- Frequency tolerance : ±50 ppm (-40 ºC to +105 ºC)
  Including frequency aging(+25 ºC, 10 years)
- PLL technology to enable short lead time
- Available field oscillator programmer "SG-Writer II"

CG 2.5 × 2.0 mm | CE 3.2 × 2.5 mm | CB 5.0 × 3.2 mm | CA 7.0 × 5.0 mm

Specifications (characteristics)

Item	Symbol	Specifications				Conditions/Remarks	
Supply voltage	V_{CC}	1.80 V Typ.		2.50 V Typ.	3.30 V Typ.	-	
		1.62 V to 1.98 V	1.98 V to 2.20 V	2.20 V to 2.80 V	2.70 V to 3.63 V		
Output frequency range	f_O	0.67 MHz to 170 MHz					
Storage temperature	T_stg	-40 °C to +125 °C				Storage as single product.	
Operating temperature	T_use	-40 °C to +105 °C				-	
Frequency tolerance*1	f_tol	J: ±50 × 10^{-6}				T_use = -40 °C to +105 °C	
Current consumption	I_{CC}	3.2 mA Max.	3.3 mA Max.	3.4 mA Max.	3.5 mA Max.	T_use = +105 °C	No load, f_O = 20 MHz
		2.7 mA Typ.		2.9 mA Typ.	3.0 mA Typ.	T_use = +25 °C	
		5.5 mA Max.	5.8 mA Max.	6.7 mA Max.	8.1 mA Max.	T_use = +105 °C	No load, f_O = 170 MHz
		4.7 mA Typ.		5.7 mA Typ.	6.8 mA Typ.	T_use = +25 °C	
Output disable current	I_dis	3.2 mA Max.	3.2 mA Max.	3.3 mA Max.	3.5 mA Max.	OE = GND, f_O = 170 MHz	
Standby current	I_std	0.9 µA Max.	1.0 µA Max.	1.5 µA Max.	2.5 µA Max.	T_use = +105 °C	$\overline{ST}$ = GND
		0.3 µA Typ.	0.4 µA Typ.	0.5 µA Typ.	1.1 µA Typ.	T_use = +25 °C	
Symmetry	SYM	45 % to 55 %				50 % V_{CC} Level	
Output voltage (DC characteristics)	V_{OH}	90 % V_{CC} Min.				I_{OH}/I_{OL} Conditions [mA]	
	V_{OL}	10 % V_{CC} Max.					

Rise/Fall time	V_{CC}	*A	*B	*C	*D
Default (f_O > 40 MHz), Fast	I_{OH}	-2.5	-3.5	-4.0	-5.0
	I_{OL}	2.5	3.5	4.0	5.0
Default (f_O ≤ 40 MHz)	I_{OH}	-1.5	-2.0	-2.5	-3.0
	I_{OL}	1.5	2.0	2.5	3.0
Slow	I_{OH}	-1.0	-1.5	-2.0	-2.5
	I_{OL}	1.0	1.5	2.0	2.5

*A: 1.62 V to 1.98 V, *B: 1.98 V to 2.20 V, *C: 2.20 V to 2.80 V, *D: 2.70 V to 3.63 V

Item	Symbol	Specifications	Conditions/Remarks
Output load condition	L_CMOS	15 pF Max.	-
Input voltage	V_{IH}	70 % V_{CC} Min.	OE or $\overline{ST}$
	V_{IL}	30 % V_{CC} Max.	
Rise time /Fall time — Default	tr/tf	3.0 ns Max.	f_O > 40 MHz; 20 % - 80 % V_{CC}, L_CMOS = 15 pF
		6.0 ns Max.	f_O ≤ 40 MHz
Rise time /Fall time — Fast		3.0 ns Max.	f_O = 0.67 MHz to 170 MHz
Rise time /Fall time — Slow		10.0 ns Max.	f_O = 0.67 MHz to 20 MHz
Output disable time (OE) Output disable time (ST)	tstp_oe tstp_st	1 µs Max.	Measured from the time OE or $\overline{ST}$ pin crosses 30 % V_{CC}
Output enable time (OE)	tsta_oe	1 µs Max.	Measured from the time OE pin crosses 70 % V_{CC}
Output enable time (ST)	tsta_st	3 ms Max.	Measured from the time $\overline{ST}$ pin crosses 70 % V_{CC}
Start-up time	t_str	3 ms Max.	Measured from the time V_{CC} reaches its rated minimum value, 1.62 V
Frequency aging	f_age	This is included in frequency tolerance specification.	+25 °C, 10 years

*1 Frequency tolerance includes initial frequency tolerance, frequency / temperature characteristics, frequency / voltage coefficient, frequency / load coefficient and frequency aging (+25 °C, 10 years).

Pin description

Pin	Name	I/O type	Function	
1	OE	Input	Output enable	High*2: Specified frequency output from OUT pin
				Low: Out pin is low (weak pull down), only output driver is disabled.
	$\overline{ST}$	Input	Standby	High*2: Specified frequency output from OUT pin
				Low: Out pin is low (weak pull down), Device goes to standby mode. Supply current reduces to the least as I_std.
2	GND	Power	Ground	
3	OUT	Output	Clock output	
4	V_{CC}	Power	Power supply	

*2 Please do not use the OE/$\overline{ST}$ terminal in the open state.

Product Name

SG-8018CG 25.000000MHz T J H P A
① ② ③ ④⑤⑥⑦⑧

①Model ②Package type ③Frequency
④Supply voltage (T: 1.8 V to 3.3 V Typ.)
⑤Frequency tolerance (J: ±50 × 10^{-6})
⑥Operating temperature (H: -40 °C to +105 °C)
⑦Function ⑧Rise/Fall time

②Package type	
CG	2.5 mm × 2.0 mm
CE	3.2 mm × 2.5 mm
CB	5.0 mm × 3.2 mm
CA	7.0 mm × 5.0 mm

⑦Function	
P	Output enable
S	Standby

⑧Rise time/Fall time	
A	Default
B	Fast
C	Slow

External dimensions (Unit: mm)

SG-8018CG

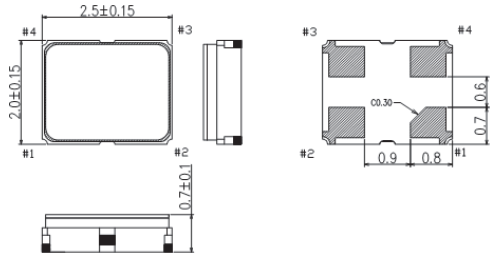

SG-8018CE

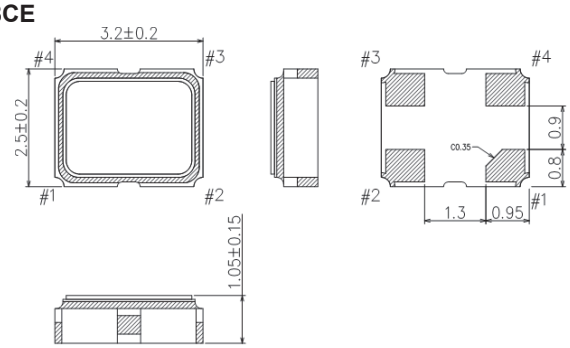

SG-8018CB

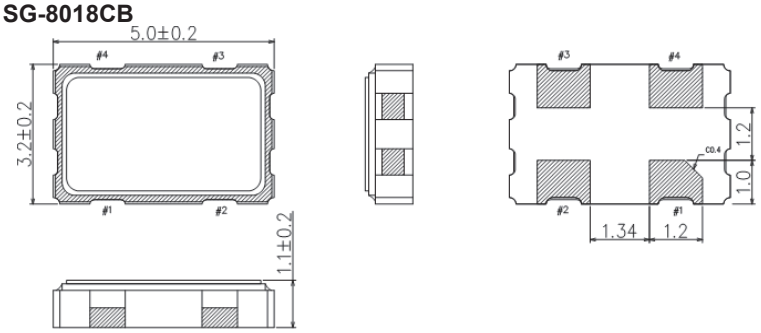

SG-8018CA

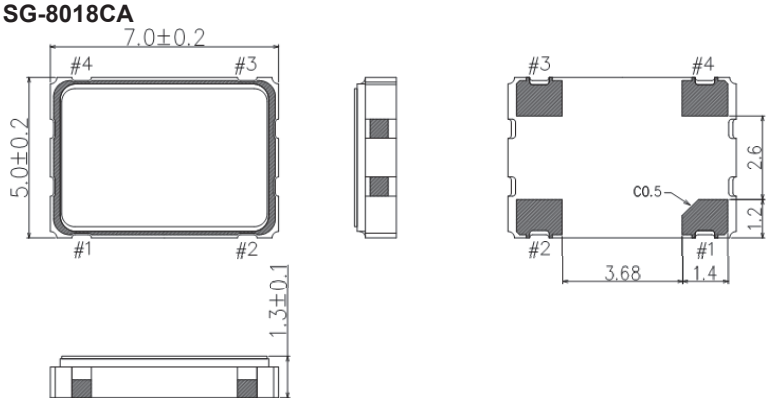

Footprint (Recommended) (Unit: mm)

SG-8018CG

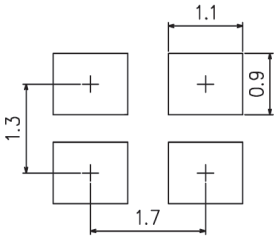

SG-8018CE

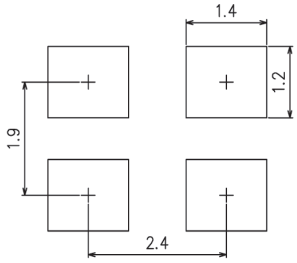

SG-8018CB

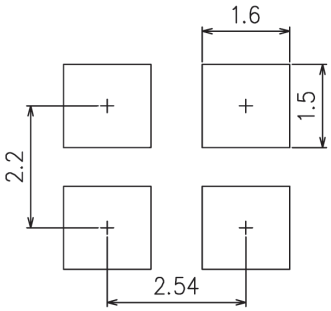

SG-8018CA

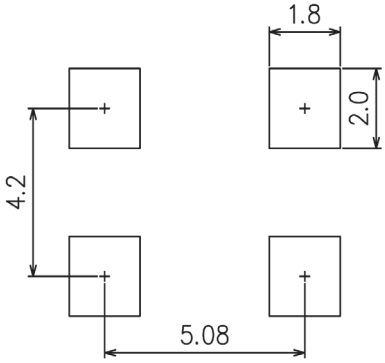

■Notes:
In order to achieve optimum jitter performance, the 0.1 μF capacitor between V_{CC} and GND should be placed. It is also recommended that the capacitors are placed on the device side of the PCB, as close to the device as possible and connected together with short wiring pattern.

CRYSTAL OSCILLATOR (Programmable)
OUTPUT: CMOS
SG-8101 series

Pb Free
RoHS Compliant

Product Number
SG-8101CG: X1G005181xxxx00
SG-8101CE: X1G005211xxxx00
SG-8101CB: X1G005201xxxx00
SG-8101CA: X1G005191xxxx00

- Frequency range : 0.67 MHz to 170 MHz (1 × 10^{-6} Step)
- Supply voltage : 1.62 V to 3.63 V
- Function : Output enable (OE) or Standby ($\overline{ST}$)
- Frequency tolerance : ±15 × 10^{-6} (-40 ºC to +85 ºC)
  ±20 × 10^{-6}, ±50 × 10^{-6} (-40 ºC to +105 ºC)
- PLL technology to enable short lead time
- Available field oscillator programmer "SG-Writer II"

CG 2.5 × 2.0 mm | CE 3.2 × 2.5 mm | CB 5.0 × 3.2 mm | CA 7.0 × 5.0 mm

Specifications (characteristics)

Item	Symbol	Specifications				Conditions/Remarks	
Supply voltage	V_{CC}	1.80 V Typ.		2.50 V Typ.	3.30 V Typ.	-	
		1.62 V to 1.98 V	1.98 V to 2.20 V	2.20 V to 2.80 V	2.70 V to 3.63 V		
Output frequency range	f_O	0.67 MHz to 170 MHz					
Storage temperature	T_stg	-40 °C to +125 °C				Storage as single product.	
Operating temperature	T_use	-40 °C to +85 °C				-	
		-40 °C to +105 °C					
Frequency tolerance*1	f_tol	B: ±15 × 10^{-6}				T_use = -40 ºC to +85 °C	
		C: ±20 × 10^{-6}				T_use = -40 ºC to +105 °C	
		J: ±50 × 10^{-6}				T_use = -40 ºC to +105 °C	
Current consumption	I_{CC}	3.2 mA Max.	3.3 mA Max.	3.4 mA Max.	3.5 mA Max.	T_use = +105 °C	No load, f_O = 20 MHz
		2.7 mA Typ.		2.9 mA Typ.	3.0 mA Typ.	T_use = +25 °C	
		5.5 mA Max.	5.8 mA Max.	6.7 mA Max.	8.1 mA Max.	T_use = +105 °C	No load, f_O = 170 MHz
		4.7 mA Typ.		5.7 mA Typ.	6.8 mA Typ.	T_use = +25 °C	
Output disable current	I_dis	3.2 mA Max.	3.2 mA Max.	3.3 mA Max.	3.5 mA Max.	OE = GND, f_O = 170 MHz	
Standby current	I_std	0.9 µA Max.	1.0 µA Max.	1.5 µA Max.	2.5 µA Max.	T_use = +105 °C	$\overline{ST}$ = GND
		0.3 µA Typ.	0.4 µA Typ.	0.5 µA Typ.	1.1 µA Typ.	T_use = +25 °C	
Symmetry	SYM	45 % to 55 %				50 % V_{CC} Level	
Output voltage (DC characteristics)	V_{OH}	90 % V_{CC} Min.				[mA]	
	V_{OL}	10 % V_{CC} Max.					

Rise/Fall time	V_{CC}	*A	*B	*C	*D
Default (f_O > 40 MHz), Fast	I_{OH}	-2.5	-3.5	-4.0	-5.0
	I_{OL}	2.5	3.5	4.0	5.0
Default (f_O ≤ 40 MHz)	I_{OH}	-1.5	-2.0	-2.5	-3.0
	I_{OL}	1.5	2.0	2.5	3.0
Slow	I_{OH}	-1.0	-1.5	-2.0	-2.5
	I_{OL}	1.0	1.5	2.0	2.5

*A: 1.62 V to 1.98 V, *B: 1.98 V to 2.20 V,
*C: 2.20 V to 2.80 V, *D: 2.70 V to 3.63 V

Item	Symbol	Specifications	Conditions/Remarks	
Output load condition	L_CMOS	15 pF Max.	-	
Input voltage	V_{IH}	70 % V_{CC} Min.	OE or $\overline{ST}$	
	V_{IL}	30 % V_{CC} Max.		
Rise time /Fall time — Default	tr/tf	3.0 ns Max.	f_O > 40 MHz	20 % - 80 % V_{CC}, L_CMOS = 15 pF
		6.0 ns Max.	f_O ≤ 40 MHz	
Rise time /Fall time — Fast		3.0 ns Max.	f_O = 0.67 MHz to 170 MHz	
Rise time /Fall time — Slow		10.0 ns Max.	f_O = 0.67 MHz to 20 MHz	
Output disable time (OE) Output disable time (ST)	tstp_oe tstp_st	1 µs Max.	Measured from the time OE or $\overline{ST}$ pin crosses 30 % V_{CC}	
Output enable time (OE)	tsta_oe	1 µs Max.	Measured from the time OE pin crosses 70 % V_{CC}	
Output enable time (ST)	tsta_st	3 ms Max.	Measured from the time $\overline{ST}$ pin crosses 70 % V_{CC}	
Start-up time	t_str	3 ms Max.	Measured from the time V_{CC} reaches its rated minimum value, 1.62 V	
Frequency aging	f_age	This is included in frequency tolerance specification.	+25 °C, first year	

*1 Frequency tolerance includes initial frequency tolerance, frequency / temperature characteristics, frequency / voltage coefficient, frequency / load coefficient and frequency aging (+25 °C, 1 year).

Pin description

Pin	Name	I/O type	Function	
1	OE	Input	Output enable	High*2: Specified frequency output from OUT pin
				Low: Out pin is low (weak pull down), only output driver is disabled.
	$\overline{ST}$	Input	Standby	High*2: Specified frequency output from OUT pin
				Low: Out pin is low (weak pull down), Device goes to standby mode. Supply current reduces to the least as I_std.
2	GND	Power	Ground	
3	OUT	Output	Clock output	
4	V_{CC}	Power	Power supply	

*2 Please do not use the OE/$\overline{ST}$ terminal in the open state.

Product Name

SG-8101CG 25.000000MHz T C H P A
① ② ③ ④⑤⑥⑦⑧

①Model ②Package type
③Frequency ④Supply voltage (T: 1.8 V to 3.3 V Typ.)
⑤Frequency tolerance ⑥Operating temperature
⑦Function ⑧Rise/Fall time

②Package type	
CG	2.5 mm × 2.0 mm
CE	3.2 mm × 2.5 mm
CB	5.0 mm × 3.2 mm
CA	7.0 mm × 5.0 mm

⑤Frequency tolerance / ⑥Operating temperature	
BG	±15 × 10^{-6} / -40 °C to +85 °C
CH	±20 × 10^{-6} / -40 °C to +105 °C
JH	±50 × 10^{-6} / -40 °C to +105 °C

⑦Function	
P	Output enable
S	Standby

⑧Rise time/Fall time	
A	Default
B	Fast
C	Slow

External dimensions (Unit: mm)

SG-8101CG

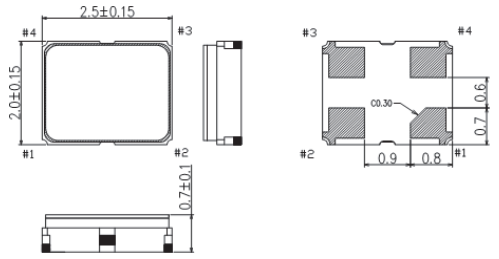

SG-8101CE

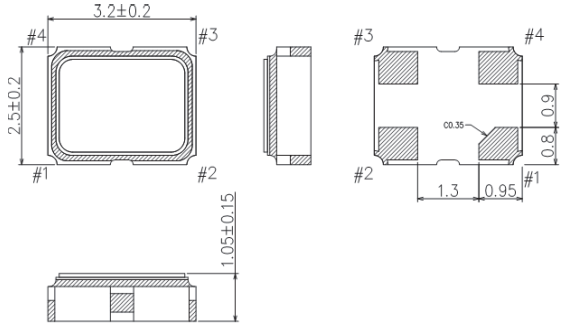

SG-8101CB

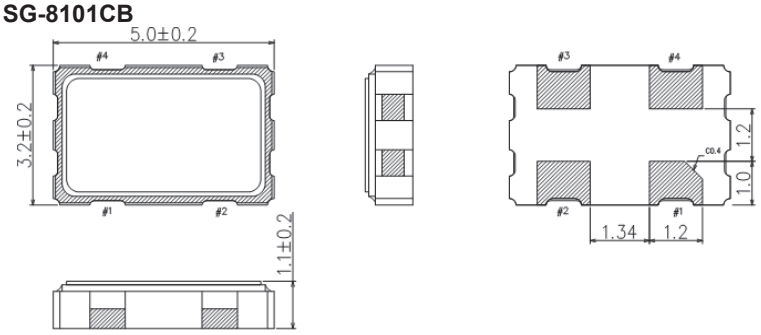

SG-8101CA

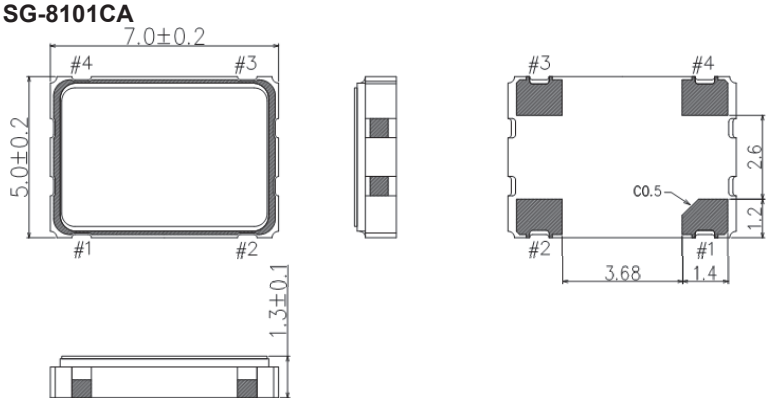

Footprint (Recommended) (Unit: mm)

SG-8101CG

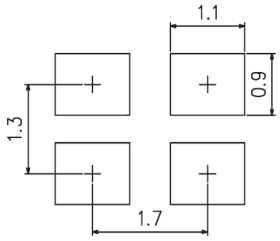

SG-8101CE

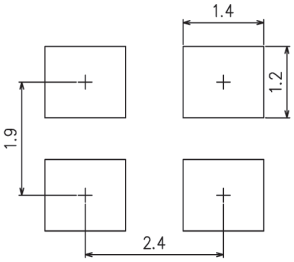

SG-8101CB

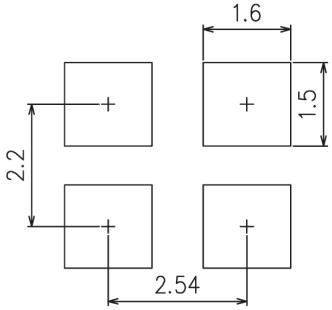

SG-8101CA

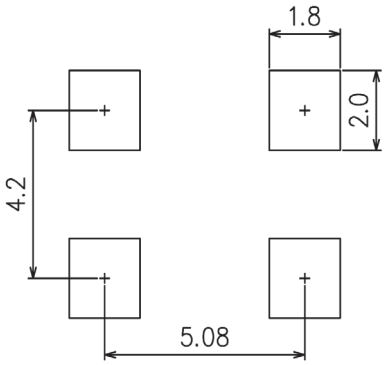

■Notes:
In order to achieve optimum jitter performance, the 0.1 μF capacitor between V_{CC} and GND should be placed. It is also recommended that the capacitors are placed on the device side of the PCB, as close to the device as possible and connected together with short wiring pattern.

CRYSTAL OSCILLATOR (Programmable)
SPREAD SPECTRUM
OUTPUT: CMOS

SG-9101 series

Product Number
SG-9101CA: X1G005301xxxx00
SG-9101CB: X1G005311xxxx00
SG-9101CE: X1G005321xxxx00
SG-9101CG: X1G005291xxxx00

- Frequency range : 0.67 MHz to 170 MHz (1 ppm Step)
- Supply voltage : 1.62 V to 3.63 V
- Function : Output enable (OE) or Standby ($\overline{ST}$)
- Configurable spread spectrum settings:
  2 kinds of spread type, 6 kinds of spread width
  4 kinds of modulation frequency, 3 kinds of spread profile
- PLL technology to enable short lead time
- Available field oscillator programmer "SG-Writer II"

CG 2.5 × 2.0 mm | CE 3.2 × 2.5 mm | CB 5.0 × 3.2 mm | CA 7.0 × 5.0 mm

Specifications (characteristics)

Item	Symbol	Specifications				Conditions/Remarks	
Supply voltage	V_{CC}	1.80 V Typ.		2.50 V Typ.	3.30 V Typ.	-	
		1.62 V to 1.98 V	1.98 V to 2.20 V	2.20 V to 2.80 V	2.70 V to 3.63 V		
Output frequency range	f_O	0.67 MHz to 170 MHz					
Storage temperature	T_stg	-40 °C to +125 °C				Storage as single product.	
Operating temperature	T_use	-40 °C to +85 °C					
		-40 °C to +105 °C					
Frequency tolerance*1	f_tol	±50 × 10^{-6}				Average frequency of 1s gate time.	
Current consumption	I_{CC}	3.4 mA Max.	3.5 mA Max.	3.6 mA Max.	3.7 mA Max.	T_use = +105 °C	No load, f_O = 20 MHz
		2.9 mA Typ.		3.0 mA Typ.	3.2 mA Typ.	T_use = +25 °C	
		5.7 mA Max.	6.0 mA Max.	6.9 mA Max.	8.3 mA Max.	T_use = +105 °C	No load, f_O = 170 MHz
		4.9 mA Typ.		5.9 mA Typ.	7.0 mA Typ.	T_use = +25 °C	
Output disable current	I_dis	3.4 mA Max.	3.4 mA Max.	3.5 mA Max.	3.7 mA Max.	OE = GND, f_O = 170 MHz	
Standby current	I_std	0.9 μA Max.	1.0 μA Max.	1.5 μA Max.	2.5 μA Max.	T_use = +105 °C	$\overline{ST}$ = GND
		0.3 μA Typ.	0.4 μA Typ.	0.5 μA Typ.	1.1 μA Typ.	T_use = +25 °C	
Symmetry	SYM	45 % to 55 %				50 % V_{CC} Level	
Output voltage (DC characteristics)	V_{OH}	90 % V_{CC} Min.				I_{OH}/I_{OL} Conditions [mA]	
	V_{OL}	10 % V_{CC} Max.					

Rise/Fall time	Vcc	*A	*B	*C	*D
Default (f_O > 40 MHz), Fast	I_{OH}	-2.5	-3.5	-4.0	-5.0
	I_{OL}	2.5	3.5	4.0	5.0
Default (f_O ≤ 40 MHz)	I_{OH}	-1.5	-2.0	-2.5	-3.0
	I_{OL}	1.5	2.0	2.5	3.0
Slow	I_{OH}	-1.0	-1.5	-2.0	-2.5
	I_{OL}	1.0	1.5	2.0	2.5

*A : 1.62 V to 1.98 V, *B : 1.98 V to 2.20 V,
*C : 2.20 V to 2.80 V, *D : 2.70 V to 3.63 V

Item	Symbol	Specifications	Conditions/Remarks	
Output load condition	L_CMOS	15 pF Max.	-	
Input voltage	V_{IH}	70 % V_{CC} Min.	OE or $\overline{ST}$	
	V_{IL}	30 % V_{CC} Max.		
Rise time /Fall time — Default	tr/tf	3.0 ns Max.	f_O > 40 MHz	20 % - 80 % V_{CC}, L_CMOS = 15 pF
		6.0 ns Max.	f_O ≤ 40 MHz	
Rise time /Fall time — Fast		3.0 ns Max.	f_O = 0.67 MHz to 170 MHz	
Rise time /Fall time — Slow		10.0 ns Max.	f_O = 0.67 MHz to 20 MHz	
Output disable time (OE) Output disable time (ST)	tstp_oe tstp_st	1 μs Max.	Measured from the time OE or $\overline{ST}$ pin crosses 30 % V_{CC}	
Output enable time (OE)	tsta_oe	1 μs Max.	Measured from the time OE pin crosses 70 % V_{CC}	
Output enable time (ST)	tsta_st	3 ms Max.	Measured from the time $\overline{ST}$ pin crosses 70 % V_{CC}	
Start-up time	t_str	3 ms Max.	Measured from the time V_{CC} reaches its rated minimum value, 1.62 V	
Frequency aging	f_age	This is included in frequency tolerance specification.	+25 °C, first year	

*1 Frequency tolerance includes initial frequency tolerance, frequency / temperature characteristics, frequency / voltage coefficient, frequency / load coefficient and frequency aging (+25 °C, 1 year).

Pin description

Pin	Name	I/O type	Function	
1	OE	Input	Output enable	High*2: Specified frequency output from OUT pin
				Low: Out pin is low (weak pull down), only output driver is disabled.
	$\overline{ST}$	Input	Standby	High*2: Specified frequency output from OUT pin
				Low: Out pin is low (weak pull down), Device goes to standby mode. Supply current reduces to the least as I_std.
2	GND	Power	Ground	
3	OUT	Output	Clock output	
4	V_{CC}	Power	Power supply	

*2 Please do not use the OE/$\overline{ST}$ terminal in the open state.

Product Name

SG-9101CG 170.000000MHz C 20 P H A A A
① ② ③ ④⑤⑥⑦⑧⑨⑩

①Model ②Package type ③Frequency
④Spread type ⑤Spread width
⑥Function ⑦Operating temperature
⑧Modulation frequency ⑨Spread profile
⑩Rise/Fall time

②Package type	
CG	2.5 mm × 2.0 mm
CE	3.2 mm × 2.5 mm
CB	5.0 mm × 3.2 mm
CA	7.0 mm × 5.0 mm

④Spread type	
C	Center spread
D	Down spread

⑤Spread width		
	Center spread	Down spread
02	±0.25 %	
05	±0.5 %	-0.5 %
07	±0.75 %	
10	±1.0 %	-1.0 %
15	±1.5 %	-1.5 %
20	±2.0 %	-2.0 %
30		-3.0 %
40		-4.0 %

⑥Function	
P	Output enable
S	Standby

⑦Operating temperature	
G	-40 °C to +85 °C
H	-40 °C to +105 °C

⑧Modulation frequency	
A	25.4 kHz (Default)
B	12.7 kHz
C	8.5 kHz
D	6.3 kHz

⑨Spread profile	
A	Hershey-kiss (Default)
B	Sine-wave
C	Triangle

⑩Rise/Fall time	
A	Default
B	Fast
C	Slow

External dimensions (Unit: mm)

SG-9101CG

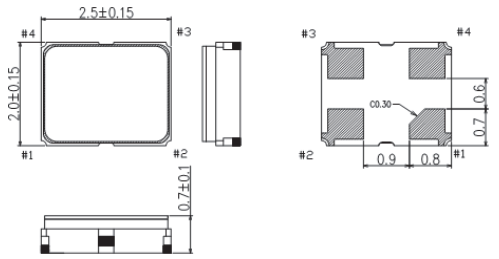

SG-9101CE

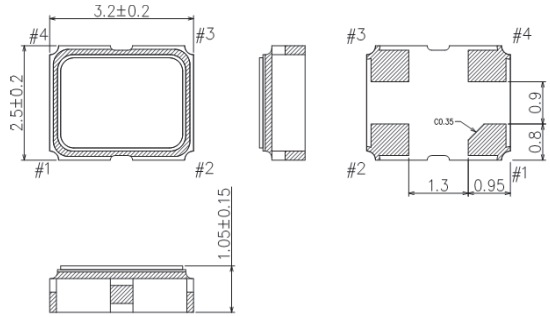

SG-9101CB

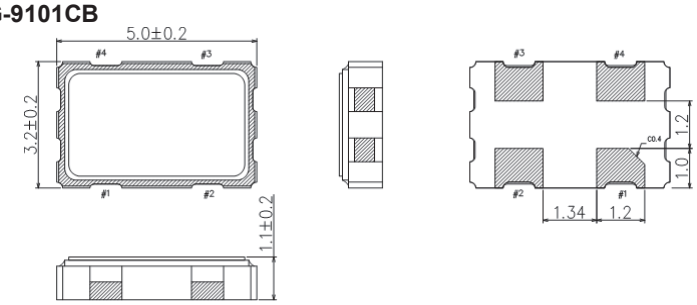

SG-9101CA

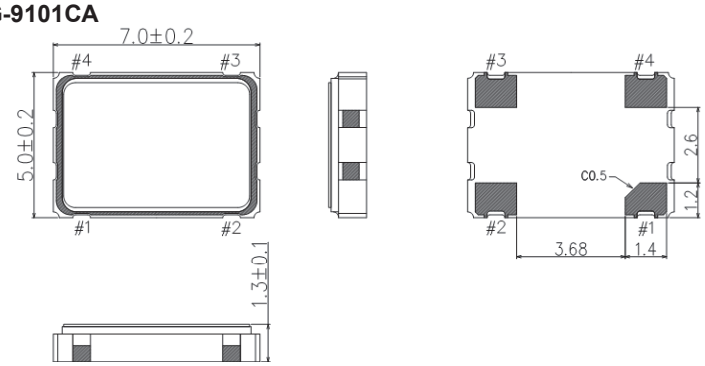

Footprint (Recommended) (Unit: mm)

SG-9101CG

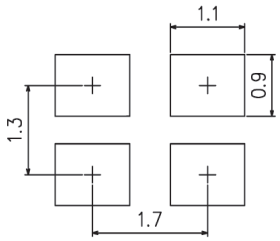

SG-9101CE

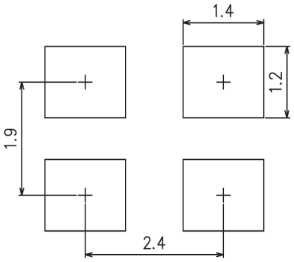

SG-9101CB

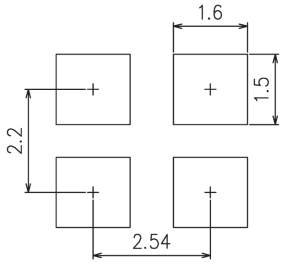

SG-9101CA

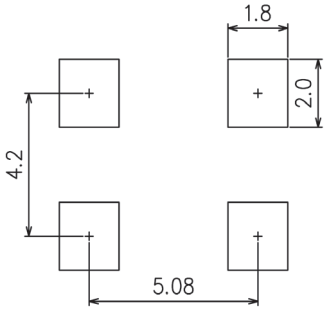

■Notes:
In order to achieve optimum jitter performance, the 0.1 μF capacitor between V_{CC} and GND should be placed. It is also recommended that the capacitors are placed on the device side of the PCB, as close to the device as possible and connected together with short wiring pattern.

Programming tool for Programmable Crystal Oscillator

SG-Writer Ⅱ

RoHS Compliant

Product Number
Q91PR20W1102000

- Programming tool for programmable oscillator: SG-8018, SG-8101, SG-9101, SG-8002, SG-8503, SG-8504 and SG-8506 series (Blank sample).
- Able to program required frequency at customer side
- External power supply by USB cable.
- Available PC OS: Windows 10 etc,
- Small body and easy carry.

Main Body Specifications

Name	SG-Writer II for programmable oscillator: SG-8018, SG-8101, SG-9101,SG-8002, SG-8503,SG-8504 and SG-8506 series
Operating Temperature	+10 °C to +40 °C Writing (+25 °C ±5 °C)
Electric Power Supply	Via USB
Standard Interface	USB 2.0 (mini-B)
Accessories	SG-Writer II, Instruction manual (Documents: English, Japanese)
Software	SG-Writer II

Option
SG-Writer IC socket
*1

Model	Product number
SG-8018CA, SG-8101CA, SG-9101CA	Q91PR10W00021
SG-8018CB, SG-8101CB, SG-9101CB	Q91PR10W00025
SG-8018CE, SG-8101CE, SG-9101CE	Q91PR10W00018
SG-8018CG, SG-8101CG, SG-9101CG	Q91PR10W00024
SG-8503CA	Q91PR10W00026
SG-8504CA	Q91PR10W00027
SG-8506CA	Q91PR10W00028

Model	Product number
SG-8002CE	Q91PR10W00018
SG-8002CA	Q91PR10W00021
SG-8002JC	Q91PR10W00004
SG-8002JA	Q91PR10W00003

Option
Blank sample

Model	Product number
SG-8018CA	X1G0055710001
SG-8018CB	X1G0055810001
SG-8018CE	X1G0055910001
SG-8018CG	X1G0056010001
SG-8101CA	X1G0051910001
SG-8101CB	X1G0052010001
SG-8101CE	X1G0052110001
SG-8101CG	X1G0051810001
SG-9101CA	X1G0053010001
SG-9101CB	X1G0053110001
SG-9101CE	X1G0053210001
SG-9101CG	X1G0052910001

Model	Product number
SG-8002CE	Q3321CE000001
SG-8002CA	Q3309CA000002
SG-8002JC	Q3307JC010002
SG-8002JA	Q3306JA020002
SG-8002DC	Q3204DC010002
SG-8503CA	X1G0050111001
SG-8504CA	X1G0050211001
SG-8506CA	X1G0050311001

*1 If you have IC socket of either SG-8002 series it can use for both SG-8018 series , SG-8101 series and SG- 9101series.
If you are using SG-WriterⅡ now and will purchase IC socket newly, please choose SG-8018 series , SG-9101 series and SG-9101 series socket (Except JC, JA package).

Recommend PC Specifications (You need to connect the SG-Writer II to a PC when you are writing.)

Available PC OS	Windows 7 (32 bit, 64 bit), Windows Vista (32 bit), Windows XP (32 bit) Windows 10 (32 bit, 64 bit)
Recommend CPU	Over Pentium 4 1.4 GHz or equivalent Processor
Recommend memory Capacity	Windows XP : Over 512 MB Windows Vista, Windows7 32 bit : Over 1 GB Windows 7 64 bit : Over 2 GB Windows 10 : Over 2 GB
Other	USB cable (Type A ↔ mini-B) Need SMD *2 socket when you write SG-8000 SMD products. (Sold separately)

*2 Conventional IC socket for PROM Writer or SG-Writer (the previous model) can be used for SG-Writer II.

Precautions

•The Blank sample of each series can be identified by marking
•The firmware update is required to program SG-8018, SG-8101, SG-9101, SG-8503, SG-8504 and SG-8506 series.
For details please contact your supplier.

CRYSTAL OSCILLATOR (SPXO)

OUTPUT : LV-PECL, LVDS

Pb Free
RoHS Compliant

Product Number
SG2520EHN: X1G005921xxxx15
SG2520VHN: X1G005941xxxx15

SG2520EHN
SG2520VHN

(2.5 × 2.0 × 0.74 mm)

- Frequency range : 25 MHz to 500 MHz
- Supply voltage : 1.8 V Typ. (LVDS only) / 2.5 V Typ. / 3.3 V Typ.
- Frequency tolerance : ±20 × 10^{-6}
- Operating temperature : -40 °C to +85 °C, -40 °C to +105 °C
- Function : Output enable (OE) or Standby ($\overline{ST}$)
- Phase jitter : 50 fs Max. (fo = 491.52 MHz)

Specifications (characteristics)

Item	Symbol	Specifications			Conditions / Remarks	
		LV-PECL	LVDS			
		SG2520EHN	SG2520VHN			
Output frequency range	fo	25 MHz to 500 MHz			Please contact us for available frequencies.	
Supply voltage	V_{CC}	C: 3.3 V ± 5 % D: 2.5 V ± 5 %		E: 1.8 V ± 5 %		
Storage temperature	T_stg	-55 °C to +125 °C				
Operating temperature	T_use	G: -40 °C to +85 °C, H: -40 °C to +105 °C				
Frequency tolerance	f_tol	C: ±20 × 10^{-6} Max.			Includes initial frequency tolerance, frequency / temperature characteristics, frequency / voltage coefficient and 10 years aging (+25 °C)	
Current consumption	I_{CC}	60 mA Max.	–		OE or $\overline{ST}$ = V_{CC}, L_ECL = 50 Ω	
		–	25 mA / 30 mA / 25 mA Max.	25 mA / – / 25 mA Max.	25 MHz ≤ fo < 212 MHz	OE or $\overline{ST}$ = V_{CC}, Output option: A / B / C
			28 mA / 35 mA / 28 mA Max.	–	212 MHz ≤ fo < 392 MHz	
			28 mA / 35 mA / 30 mA Max.	–	392 MHz ≤ fo ≤ 500 MHz	
Disable current	I_dis	35 mA Max.	20 mA Max.		OE = GND	
Stand-by current	I_std	30 μA Max.			$\overline{ST}$ = GND, T_use Max. = +85 °C	
		60 μA Max.			$\overline{ST}$ = GND, T_use Max. = +105 °C	
Symmetry	SYM	45 % to 55 %			At output crossing point	
Output voltage (LV-PECL)	V_{OH}	V_{CC} - 1.1 V Min.	–		Output option: A, DC characteristic	
	V_{OL}	V_{CC} - 1.5 V Max.				
Differential swing	V_{SW}	0.8 V to 2.0 V	500 mV to 900 mV	500 mV to 900 mV	Output option: A	
		–	800 mV to 1 600 mV	–	Output option: B	
		–	600 mV to 1 200 mV	600 mV to 1 200 mV	Output option: C	
Output voltage (LVDS)	V_{OD}	–	250 mV to 450 mV	250 mV to 450 mV	Output option: A	Differential output voltage, V_{OD1}, V_{OD2}
			400 mV to 800 mV	–	Output option: B	
			300 mV to 600 mV	300 mV to 600 mV	Output option: C	
	dV_{OD}	–	50 mV Max.		dV_{OD} = | V_{OD1} - V_{OD2} |	
	V_{OS}	–	1.15 V to 1.35 V	0.65 V to 0.85 V	Offset voltage, V_{OS1}, V_{OS2}	
	dV_{OS}	–	50 mV Max.		dV_{OS} = | V_{OS1} - V_{OS2} |	
Output load condition	L_ECL	50 Ω	–		Terminated to V_{CC} - 2.0 V	
	L_LVDS	–	100 Ω		Connected between OUT and $\overline{OUT}$	
Input voltage	V_{IH}	70 % V_{CC} Min.			OE or $\overline{ST}$ terminal	
	V_{IL}	30 % V_{CC} Max.				
Rise/Fall times	tr/tf	0.35 ns Max.			LV-PECL: 20 % - 80 % (V_{OH} - V_{OL}) LVDS: 20 % - 80 % differential output peak to peak	
Start-up time	t_str	10 ms Max.			t = 0 at 90 % V_{CC}	
Phase jitter	t_{PJ}	250 fs Max.	250 fs Max.	400 fs Max.	25 MHz ≤ fo < 100 MHz	Offset frequency fo < 50 MHz: 12 kHz to 5 MHz fo ≥ 50 MHz: 12 kHz to 20 MHz
		90 fs Max.	100 fs Max.	130 fs Max.	100 MHz ≤ fo ≤ 156 MHz	
		70 fs Max.	60 fs Max.	70 fs Max.	156 MHz < fo ≤ 212 MHz	
		60 fs Max.	50 fs Max.	60 fs Max.	212 MHz < fo ≤ 391 MHz	
		50 fs Max.	50 fs Max.	60 fs Max.	391 MHz < fo ≤ 500 MHz	

Product Name (Standard form)
SG2520 EHN 156.250000MHz C C H P Z A
① ② ③ ④⑤⑥⑦⑧⑨

①Model ②Output (E: LV-PECL, V: LVDS) ③Frequency ④Supply voltage ⑤Frequency tolerance (C: ±20 × 10^{-6})
⑥Operating temperature ⑦Function ⑧Output disable type (Z: High impedance) ⑨Output option

④Supply voltage	
C	3.3 V Typ.
D	2.5 V Typ.
E*	1.8 V Typ.

* "E" is only for SG2520VHN

⑥Operating temp.	
G	-40 °C to +85 °C
H	-40 °C to +105 °C

⑦Function	
P	OE
S	$\overline{ST}$

⑨Output option		
	SG2520EHN	SG2520VHN
A	Default	V_{SW} = 500 mV to 900 mV
B	-	V_{SW} = 800 mV to 1 600 mV
C	-	V_{SW} = 600 mV to 1 200 mV

External dimensions (Unit:mm)

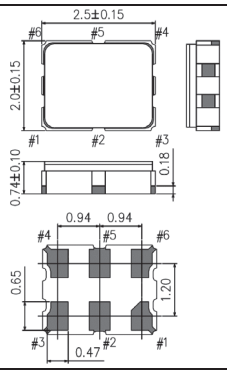

Pin map

Pin	Connection
1	OE
2	N.C. (Open or V_{CC})
3	GND
4	OUT
5	$\overline{OUT}$
6	V_{CC}

Note:
OE pin = HIGH or "Open": Specified frequency output.
OE pin = LOW: Output is high impedance

Footprint (Recommended) (Unit:mm)

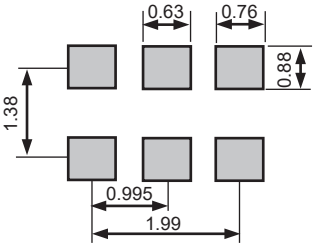

In order to achieve optimum jitter performance, it is recommended that 0.1 μF and 10 μF bypass capacitors should be connected between V_{CC} and GND and placed as close to the V_{CC} pin as possible.

CRYSTAL OSCILLATOR (SPXO)

OUTPUT : LV-PECL, LVDS

Pb Free
RoHS Compliant

Product Number
SG2520EGN: X1G005881xxxx15
SG2520VGN: X1G005901xxxx15

SG2520EGN
SG2520VGN

- Frequency range : 25 MHz to 500 MHz
- Supply voltage : 1.8 V Typ. (LVDS only) / 2.5 V Typ. / 3.3 V Typ.
- Frequency tolerance : ±25 × 10^{-6}, ±50 × 10^{-6}
- Operating temperature : -40 °C to +85 °C, -40 °C to +105 °C
- Function : Output enable (OE) or Standby ($\overline{ST}$)
- Phase jitter : 50 fs Max. (fo = 491.52 MHz)

(2.5 × 2.0 × 0.74 mm)

Specifications (characteristics)

Item	Symbol	Specifications			Conditions / Remarks	
		LV-PECL	LVDS			
		SG2520EGN	SG2520VGN			
Output frequency range	fo	25 MHz to 500 MHz			Please contact us for available frequencies.	
Supply voltage	V_{CC}	C: 3.3 V ± 5 % D: 2.5 V ± 5 %		E: 1.8 V ± 5 %		
Storage temperature	T_stg	-55 °C to +125 °C				
Operating temperature	T_use	G: -40 °C to +85 °C, H: -40 °C to +105 °C				
Frequency tolerance	f_tol	D: ±25 × 10^{-6} Max. J: ±50 × 10^{-6} Max.			Includes initial frequency tolerance, frequency / temperature characteristics, frequency / voltage coefficient and 10 years aging (+25 °C)	
Current consumption	I_{CC}	60 mA Max.	–		OE or $\overline{ST}$ = V_{CC}, L_ECL = 50 Ω	
		–	25 mA / 30 mA / 25 mA Max.	25 mA / – / 25 mA Max.	25 MHz ≤ fo < 212 MHz	OE or $\overline{ST}$ = V_{CC}, Output option: A / B / C
			28 mA / 35 mA / 28 mA Max.	–	212 MHz ≤ fo < 392 MHz	
			28 mA / 35 mA / 30 mA Max.	–	392 MHz ≤ fo ≤ 500 MHz	
Disable current	I_dis	35 mA Max.	20 mA Max.		OE = GND	
Stand-by current	I_std	30 μA Max.			$\overline{ST}$ = GND, T_use Max. = +85 °C	
		60 μA Max.			$\overline{ST}$ = GND, T_use Max. = +105 °C	
Symmetry	SYM	45 % to 55 %			At output crossing point	
Output voltage (LV-PECL)	V_{OH}	V_{CC} - 1.1 V Min.	–		Output option: A, DC characteristic	
	V_{OL}	V_{CC} - 1.5 V Max.				
Differential swing	V_{SW}	0.8 V to 2.0 V	500 mV to 900 mV	500 mV to 900 mV	Output option: A	
		–	800 mV to 1 600 mV	–	Output option: B	
		–	600 mV to 1 200 mV	600 mV to 1 200 mV	Output option: C	
Output voltage (LVDS)	V_{OD}	–	250 mV to 450 mV	250 mV to 450 mV	Output option: A	Differential output voltage, V_{OD1}, V_{OD2}
			400 mV to 800 mV	–	Output option: B	
			300 mV to 600 mV	300 mV to 600 mV	Output option: C	
	dV_{OD}	–	50 mV Max.		dV_{OD} = | V_{OD1} - V_{OD2} |	
	V_{OS}	–	1.15 V to 1.35 V	0.65 V to 0.85 V	Offset voltage, V_{OS1}, V_{OS2}	
	dV_{OS}	–	50 mV Max.		dV_{OS} = | V_{OS1} - V_{OS2} |	
Output load condition	L_ECL	50 Ω	–		Terminated to V_{CC} - 2.0 V	
	L_LVDS	–	100 Ω		Connected between OUT and $\overline{OUT}$	
Input voltage	V_{IH}	70 % V_{CC} Min.			OE or $\overline{ST}$ terminal	
	V_{IL}	30 % V_{CC} Max.				
Rise/Fall times	tr/tf	0.35 ns Max.			LV-PECL: 20 % - 80 % (V_{OH} - V_{OL}) LVDS: 20 % - 80 % differential output peak to peak	
Start-up time	t_str	10 ms Max.			t = 0 at 90 % V_{CC}	
Phase jitter	t_{PJ}	250 fs Max.	250 fs Max.	400 fs Max.	25 MHz ≤ fo < 100 MHz	Offset frequency fo < 50 MHz: 12 kHz to 5 MHz, fo ≥ 50 MHz: 12 kHz to 20 MHz
		90 fs Max.	100 fs Max.	130 fs Max.	100 MHz ≤ fo ≤ 156 MHz	
		70 fs Max.	60 fs Max.	70 fs Max.	156 MHz < fo ≤ 212 MHz	
		60 fs Max.	50 fs Max.	60 fs Max.	212 MHz < fo ≤ 391 MHz	
		50 fs Max.	50 fs Max.	60 fs Max.	391 MHz < fo ≤ 500 MHz	

Product Name (Standard form): SG2520 EGN 156.250000MHz C D H P Z A
① ② ③ ④⑤⑥⑦⑧⑨

①Model ②Output (E: LV-PECL, V: LVDS) ③Frequency ④Supply voltage ⑤Frequency tolerance
⑥Operating temperature ⑦Function ⑧Output disable type (Z: High impedance) ⑨Output option

④Supply voltage	
C	3.3 V Typ.
D	2.5 V Typ.
E*	1.8 V Typ.

* "E" is only for SG2520VGN

⑤Freq. tolerance	
D	±25 × 10^{-6}
J	±50 × 10^{-6}

⑥Operating temp.	
G	-40 °C to +85 °C
H	-40 °C to +105 °C

⑦Function	
P	OE
S	$\overline{ST}$

⑨Output option		
	SG2520EGN	SG2520VGN
A	Default	V_{SW} = 500 mV to 900 mV
B	-	V_{SW} = 800 mV to 1 600 mV
C	-	V_{SW} = 600 mV to 1 200 mV

External dimensions (Unit:mm)

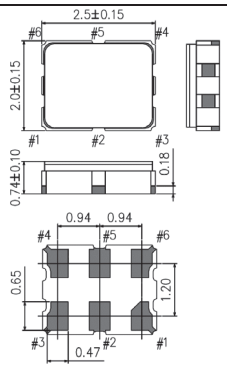

Pin map

Pin	Connection
1	OE
2	N.C. (Open or V_{CC})
3	GND
4	OUT
5	$\overline{OUT}$
6	V_{CC}

Note:
OE pin = HIGH or "Open": Specified frequency output.
OE pin = LOW: Output is high impedance

Footprint (Recommended) (Unit:mm)

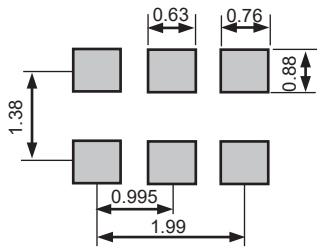

In order to achieve optimum jitter performance, it is recommended that 0.1 μF and 10 μF bypass capacitors should be connected between V_{CC} and GND and placed as close to the V_{CC} pin as possible.

CRYSTAL OSCILLATOR (SPXO)

OUTPUT : LV-PECL, LVDS

SG3225 / 5032 / 7050EEN
SG3225 / 5032 / 7050VEN

Pb Free
RoHS Compliant

Product Number
SG3225EEN: X1G005221xxxx00 (fo ≤ 200 MHz)
X1G005511xxxx00 (fo > 200 MHz)
SG5032EEN: X1G005531xxxx00
SG7050EEN: X1G005131xxxx00 (fo ≤ 200 MHz)
X1G005551xxxx00 (fo > 200 MHz)
SG3225VEN: X1G005351xxxx00 (fo ≤ 200 MHz)
X1G005521xxxx00 (fo > 200 MHz)
SG5032VEN: X1G005541xxxx00
SG7050VEN: X1G005331xxxx00 (fo ≤ 200 MHz)
X1G005561xxxx00 (fo > 200 MHz)

- Frequency range : 25 MHz to 500 MHz
- Supply voltage : 2.5 V Typ. / 3.3 V Typ.
- Output : LV-PECL or LVDS
- Function : Output enable (OE)
- Phase jitter : 50 fs Typ. (fo = 156.25 MHz, LV-PECL)
- Operating temperature : -40 °C to +105 °C

SG3225EEN
SG3225VEN
(3.2 × 2.5 × 1.05 mm)

SG5032EEN
SG5032VEN
(5.0 × 3.2 × 1.3 mm)

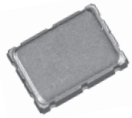
SG7050EEN
SG7050VEN
(7.0 × 5.0 × 1.5 mm)

Specifications (characteristics)

Item	Symbol	Specifications: LV-PECL (SG3225EEN / SG5032EEN / SG7050EEN)	Specifications: LVDS (SG3225VEN / SG5032VEN / SG7050VEN)	Conditions / Remarks	
Output frequency range	fo	25 MHz to 500 MHz		Except for SG5032EEN / SG5032VEN	Please contact us for available frequencies.
		200.1 MHz to 500 MHz		SG5032EEN / SG5032VEN	
Supply voltage	V_{CC}	D: 2.5 V ± 0.125 V, C: 3.3 V ± 0.165 V			
Storage temperature	T_stg	-55 °C to +125 °C			
Operating temperature	T_use	G: -40 °C to +85 °C, H: -40 °C to +105 °C			
Frequency tolerance	f_tol	D: ±25 × 10^{-6} Max.		Includes initial frequency tolerance, temperature variation, supply voltage change and 5 years aging (+25 °C)	Refer to figure *1
		J: ±50 × 10^{-6} Max.		Includes initial frequency tolerance, temperature variation, supply voltage change and 10 years aging (+25 °C)	
		L: ±100 × 10^{-6} Max.			
Current consumption	I_{CC}	60 mA Max.	25 mA Max.	OE = V_{CC}, L_ECL = 50 Ω or L_LVDS = 100 Ω	
Disable current	I_dis	25 mA Max.	15 mA Max.	OE = GND	
Symmetry	SYM	45 % to 55 %		At output crossing point	
Output voltage (LV-PECL)	V_{OH}	V_{CC} - 1.1 V Min.	–	DC characteristics	
	V_{OL}	V_{CC} - 1.5 V Max.	–		
Output voltage (LVDS)	V_{OD}	–	250 mV to 450 mV	Differential output voltage, V_{OD1}, V_{OD2}	DC characteristics
	dV_{OD}	–	50 mV Max.	dV_{OD} = | V_{OD1} - V_{OD2} |	
	V_{OS}	–	1.15 V to 1.35 V	Offset voltage, V_{OS1}, V_{OS2}	
	dV_{OS}	–	50 mV Max.	dV_{OS} = | V_{OS1} - V_{OS2} |	
Output load condition	L_ECL	50 Ω	–	Terminated to V_{CC} - 2.0 V	
	L_LVDS	–	100 Ω	Connected between OUT to $\overline{OUT}$	
Input voltage	V_{IH}	70 % V_{CC} Min.		OE terminal	
	V_{IL}	30 % V_{CC} Max.			
Rise/Fall times	tr / tf	0.3 ns Max.	0.3 ns Max.	V_{CC} = 3.3 V, 25 MHz ≤ fo ≤ 200 MHz	LV-PECL: Between 20 % and 80 % of (V_{OH} - V_{OL}) LVDS: Between 20 % and 80 % of Differential Output peak to peak voltage
		0.35 ns Max.		All other	
Startup time	t_str	10 ms Max.		Time at minimum supply voltage to be 0 s	

Phase Jitter

Product Name	100 MHz	125 MHz	156.25 MHz	200 MHz	312.5 MHz	491.52 MHz	Conditions
SG3225EEN / SG5032EEN / SG7050EEN	75 fs Typ.	60 fs Typ.	50 fs Typ.	40 fs Typ.	30 fs Typ.	20 fs Typ.	Offset frequency: 12 kHz to 20 MHz
SG3225VEN / SG5032VEN / SG7050VEN	90 fs Typ.	70 fs Typ.	60 fs Typ.	50 fs Typ.	40 fs Typ.	30 fs Typ.	

Product Name (Standard form): SG3225 EEN 156.250000MHz C D G A (⑤⑥: Unavailable code DH, DG and JH at fo > 200 MHz, Refer to figure *1)
① ② ③ ④⑤⑥⑦
①Model ②Output (E: LV-PECL, V: LVDS) ③Frequency ④Supply voltage
⑤Frequency tolerance ⑥Operating temperature ⑦Internal identification code("A" is default)

*1 : Maximum T_use of operating range

④Supply voltage	
C	3.3 V Typ.
D	2.5 V Typ.

⑤Frequency tolerance	
D	±25 × 10^{-6}
J	±50 × 10^{-6}
L	±100 × 10^{-6}

⑥Operating temperature	
G	-40 to +85 °C
H	-40 to +105 °C

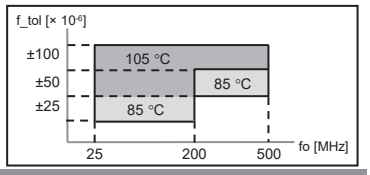

External dimensions (Unit:mm)

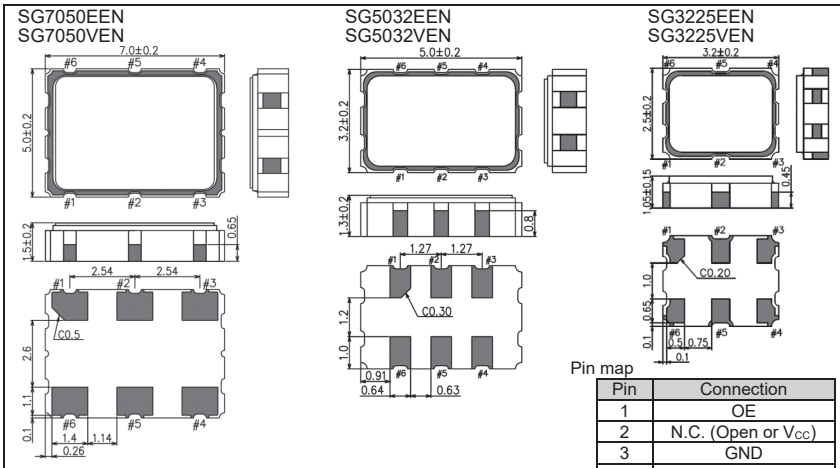

Pin map

Pin	Connection
1	OE
2	N.C. (Open or V_{CC})
3	GND
4	OUT
5	$\overline{OUT}$
6	V_{CC}

Note:
OE pin = HIGH or "Open": Specified frequency output.
OE pin = LOW: Output is high impedance

Footprint (Recommended) (Unit:mm)

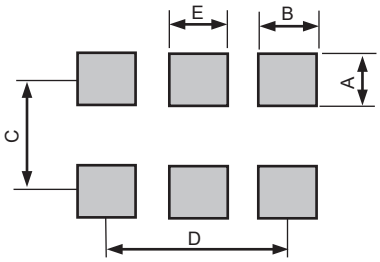

	SG3225EEN SG3225VEN	SG5032EEN SG5032VEN	SG7050EEN SG7050VEN
A	1.05	1.60	2.00
B	0.92	0.89	1.80
C	1.85	2.60	4.20
D	2.58	2.54	5.08
E	0.80	0.89	1.80

In order to achieve optimum jitter performance, it is recommended that 0.1 µF and 10 µF bypass capacitors should be connected between V_{CC} and GND and placed as close to the V_{CC} pin as possible.

CRYSTAL OSCILLATOR (SPXO)

OUTPUT : LV-PECL, LVDS

SG3225EAN / VAN
SG5032EAN / VAN
SG7050EAN / VAN

- Achieved wide frequency range by PLL technology and Fundamental AT crystal units
- Frequency range : 73.5 MHz to 700 MHz
- Supply voltage : 2.5 V to 3.3 V
- Function : Output enable (OE)
- Output : LV-PECL or LVDS

Pb Free
RoHS Compliant

Product Number
SG3225EAN: X1G004251xxxx00
SG3225VAN: X1G004241xxxx00
SG5032EAN: X1G004271xxxx00
SG5032VAN: X1G004261xxxx00
SG7050EAN: X1G004291xxxx00
SG7050VAN: X1G004281xxxx00

SG3225EAN/VAN (3.2 × 2.5 × 1.05 mm) SG5032EAN/VAN (5.0 × 3.2 × 1.0 mm) SG7050EAN/VAN (7.0 × 5.0 × 1.4 mm)

Specifications (characteristics)

Item	Symbol	Specifications: LV-PECL (SG3225EAN / SG5032EAN / SG7050EAN)	Specifications: LVDS (SG3225VAN / SG5032VAN / SG7050VAN)	Conditions / Remarks	
Output frequency range	f_0	73.5 MHz to 700 MHz		Please contact us about available frequencies.	
Supply voltage	V_{CC}	K: 2.5 V - 10 % to 3.3 V + 10 %			
Storage temperature	T_stg	-40 °C to +125 °C		Storage as single product.	
Operating temperature	T_use	B: -20 °C to +70 °C, G: -40 °C to +85 °C			
Frequency tolerance	f_tol	J: ± 50 × 10^{-6}, E: ± 30 × 10^{-6}, C: ± 20 × 10^{-6}			
Current consumption	I_{CC}	65 mA Max.	30 mA Max.	OE = Vcc, L_ECL = 50 Ω or L_LVDS = 100 Ω	
Disable current	I_dis	20 mA Max.		OE = GND	
Symmetry	SYM	45 % to 55 %		At outputs crossing point	
Output voltage (LV-PECL)	V_{OH}	V_{CC} - 1.0 V to V_{CC} - 0.8 V	–	DC characteristics	
	V_{OL}	V_{CC} - 1.78 V to V_{CC} - 1.62 V	–		
Output voltage (LVDS)	V_{OD}	–	250 mV to 450 mV	V_{OD1}, V_{OD2}	DC characteristics
	dV_{OD}	–	50 mV Max.	dV_{OD} = | V_{OD1}-V_{OD2} |	
	V_{OS}	–	1.15 V to 1.35 V	V_{OS1}, V_{OS2}	
	dV_{OS}	–	150 mV Max.	dV_{OS} = | V_{OS1}-V_{OS2} |	
Output load condition (ECL) / (LVDS)	L_ECL	50 Ω	–	Terminated to V_{CC} -2.0 V	
	L_LVDS	–	100 Ω	Connected between OUT to $\overline{OUT}$	
Input voltage	V_{IH}	70 % V_{CC} Min.		OE terminal	
	V_{IL}	30 % V_{CC} Max.			
Rise time / Fall time	t_r / t_f	350 ps Max.	300 ps Max.	LV-PECL: Between 20 % and 80 % of (VOH-VOL). LVDS: Between 20 % and 80 %of Differential Output peak to peak voltage	
Start-up time	t_str	3 ms Max.		Time at minimum supply voltage to be 0 s	
Phase Jitter	t_{PJ}	0.6 ps Max.*1		Offset frequency: 12 kHz to 20 MHz	
Frequency aging	f_age	± 5 × 10^{-6} / year Max.		+25 °C, First year, V_{CC} = 2.5 V, 3.3 V	

*1 0.9 ps Max. (f_0 = 243 MHz ~ 250 MHz, 486 MHz ~ 500 MHz)

Product Name (Standard form)
SG3225 E AN 156.250000MHz K J G A (⑤⑥: CG is not available)
① ② ③ ④⑤⑥⑦
①Model ②Output (E: LV-PECL, V: LVDS) ③Frequency ④Supply voltage ⑤Frequency tolerance
⑥Operating temperature ⑦Internal identification code ("A" is default)

④Supply voltage	
K	2.5 V ~ 3.3 V

⑤Frequency tolerance	
J	±50 × 10^{-6}
E	±30 × 10^{-6}
C	±20 × 10^{-6}

⑥Operating temperature	
B	-20 °C ~ +70 °C
G	-40 °C ~ +85 °C

External dimensions (Unit: mm)

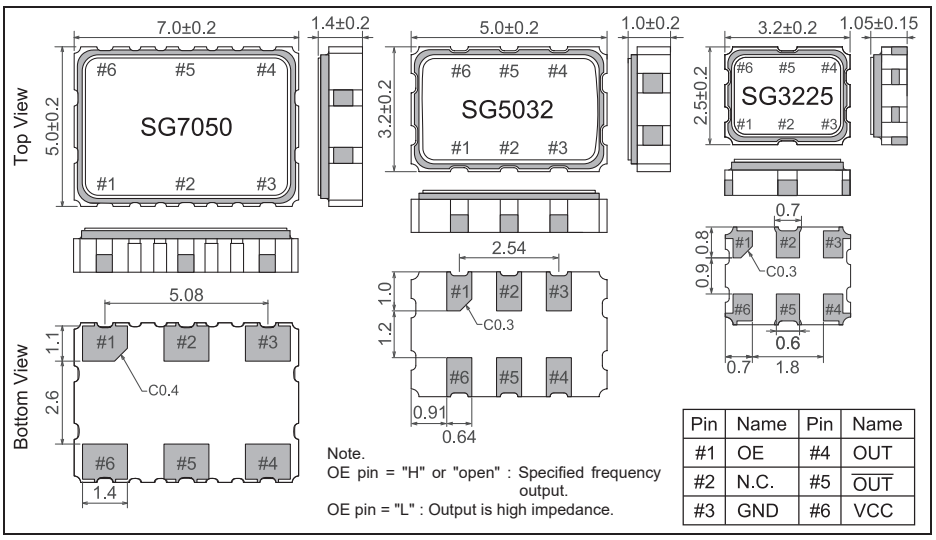

Note.
OE pin = "H" or "open" : Specified frequency output.
OE pin = "L" : Output is high impedance.

Pin	Name	Pin	Name
#1	OE	#4	OUT
#2	N.C.	#5	$\overline{OUT}$
#3	GND	#6	VCC

Footprint (Recommended) (Unit: mm)

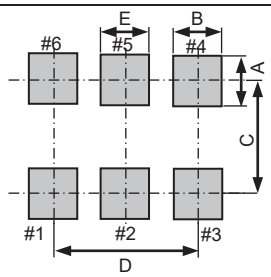

Size

	SG3225 type	SG5032 type	SG7050 type
A	1.05	1.60	2.00
B	0.86	0.89	1.80
C	1.85	2.60	4.20
D	2.58	2.54	5.08
E	0.82	0.89	1.80

To maintain stable operation, provide a 0.01 μF to 0.1 μF by-pass capacitor at a location as near as possible to the power source terminal of the crystal product (between Vcc - GND).

CRYSTAL OSCILLATOR (SPXO)
OUTPUT : HCSL

Pb Free
RoHS Compliant

Product Number
X1G005141xxxx00

SG3225HBN

- Frequency range : 100 MHz to 325 MHz
- Supply voltage : 2.5V, 3.3 V
- Output : HCSL
- Function : Output enable (OE)
- External dimensions : 3.2 × 2.5 × 1.05 mm
- Phase jitter : 85 fs Typ (fo = 156.25MHz)

Specifications (characteristics)

Item	Symbol	Specifications	Conditions / Remarks
Output frequency range	fo	100 MHz to 325 MHz	Please contact us for inquiries regarding available frequencies.
Supply voltage	V_{CC}	D : 2.5 V ± 0.125 V , C : 3.3 V ± 0.165 V	
Storage temperature	T_stg	-55 °C to +125 °C	Store as bare product.
Operating temperature	T_use	G: -40 °C to +85 °C, H: -40 °C to +105 °C	
Frequency tolerance	f_tol	J: ± 50 × 10^{-6} (Not available H : -40 °C to +105 °C)	Includes initial frequency tolerance, temperature variation, supply voltage change and 10 years aging(+25 °C)
		L: ± 100 × 10^{-6}	
Current consumption	I_{CC}	25 mA Typ. 35 mA Max.	OE= V_{CC}, with output load
Disable current	I_dis	15 mA Max.	OE=GND
Symmetry	SYM	45 % to 55 %	At outputs crossing point
Output voltage	V_{OH}	0.75 V Typ., 0.66 V to 0.85 V	DC characteristics, single output
	V_{OL}	0 V Typ., -0.15 V to 0.15 V	
Crossing voltage	V_{CR}	0.25 V to 0.55 V	
Output load condition	L_HCSL	50 Ω	
	R_S	33 Ω	
Input voltage	V_{IH}	70 % V_{CC} Min.	OE terminal
	V_{IL}	30 % V_{CC} Max.	
differential output rise slew rate/ fall slew rate	Rr / Rf	1 V/ns to 4 V/ns	Between -0.15 V and 0.15 V of differential output
Start-up time	t_str	10 ms Max.	Time at minimum supply voltage to be 0 s

Phase Jitter

	Output frequency	100 MHz	125 MHz	156.25 MHz	200 MHz	322.265625 MHz	Supply voltage
Phase Jitter [fs] (Offset Frequency 12k to 20MHz)	Typ.	110	95	85	75	65	V_{CC}=3.3V±0.165V
	Max.	180	160	140	125	110	

Product Name (Standard form)
SG3225 HBN 156.250000MHz C J G A (⑤⑥: Not Available code JH)
① ② ③ ④⑤⑥⑦
①Model ②Output (H: HCSL) ③Frequency ④Supply voltage (D: 2.5 V Typ. , C: 3.3 V Typ.)
⑤Frequency tolerance (J: ±50 × 10^{-6} L: ±100 × 10^{-6})
⑥Operating temperature (G:-40 to +85°C, H:-40 to +105°C) ⑦Internal identification code("A" is default)

External dimensions (Unit:mm)

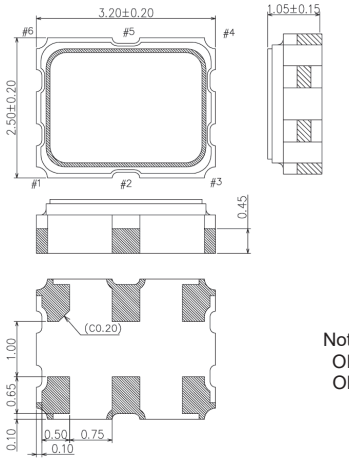

Pin map

Pin	Connection
1	OE
2	N.C.
3	GND
4	OUT
5	$\overline{OUT}$
6	V_{CC}

Note:
OE pin = HIGH or "Open" : Specified frequency output.
OE pin = LOW : Output is high impedance

Footprint (Recommended) (Unit:mm)

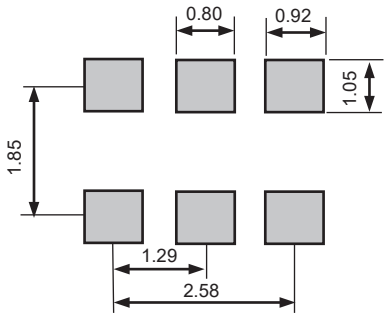

In order to achieve optimum jitter performance, it is recommended that the capacitor (0.1 μF + 10 μF) between V_{CC} and GND pin should be placed as close to the V_{CC} pin as possible.

I²C-Bus Programmable Crystal Oscillator (SPXO)
Output: LV-PECL

SG-8506CA

Product Number
X1G005031xxxx00

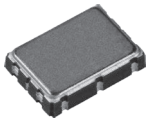
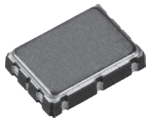

- Frequency range : 50 MHz to 800 MHz
- Supply voltage : 2.5 V to 3.3 V
- External dimensions : 7.0 × 5.0 × 1.5 mm (8 pins)

Features
- User-specified one startup frequency, 7-bit I²C
- User Programming: I²C Interface
- High frequency fundamental tone crystal, Low jitter PLL technology
- Available field oscillator programmer "SG-Writer II"

Application
- OTN, BTS, Test Instrument

*The I2C-Bus is a trademark of NXP Semiconductors

Specifications (characteristics)

Item	Symbol	Specifications	Conditions / Remarks
Output frequency range	fo	50 MHz to 800 MHz	It can be changed by I²C
Supply voltage	V_{CC}	2.5 V - 0.125 V to 3.3 V + 0.33 V	-
Storage temperature	T_stg	-55 ºC to +125 ºC	Store as bare product after packing
Operating temperature	T_use	-40 ºC to +85 ºC	-
Frequency tolerance *1	f_tol	K : ±31.5 × 10^{-6}	Customized Product (Option)
		L : ±50 × 10^{-6}	
Current consumption	I_{CC}	90 mA Max.	OE Active, L_ECL=50 Ω
Disable current	I_dis	40 mA Max.	OE Inactive, Output Standby: Hi-Z mode
		70 mA Max.	OE Inactive, Output Standby: Fix mode
Symmetry	SYM	45 % to 55 %	At outputs crossing point
Output voltage	V_{OH}	V_{CC} - 1.025 V Min.	DC characteristics
	V_{OL}	V_{CC} - 1.62 V Max.	
Output load condition	L_ECL	50 Ω	Termination to V_{CC} - 2.0 V
Input voltage	V_{IH}	70% V_{CC} Min.	OE, SDA and SCL
	V_{IL}	30% V_{CC} Max.	
Rise time / Fall time	tr / tf	400 ps Max.	Between 20% and 80% of (V_{OH} - V_{OL})
Start-up time	t_str	10 ms Max.	Time at minimum supply voltage to be 0 s
Setting time for frequency change	t_{SET1}	1.5 ms Max.	From setting NEW_FREQ bit to output new frequency

*1 Frequency tolerance includes initial frequency tolerance, temperature variation, supply voltage change, reflow drift and 10 years aging at +25 ºC.

Product Name (Standard form) SG-8506 CA 156.2MHz 0x37 A P R L Z
① ② ③ ④ ⑤ ⑥ ⑦ ⑧ ⑨

① Model, ② Package type,
③ Power-on default output frequency (50 ~ 800 MHz), ④ I²C slave address, ⑤ Internal crystal frequency,
⑥ Output enable pin Polarity, ⑦ Supply voltage/Output format, ⑧ Frequency tolerance/Operating temperature, ⑨ Output standby type

⑤ Internal crystal frequency	
A	114.1444 MHz

⑥ Output enable pin Polarity	
P	Active High
Q	Active Low

⑦ Supply voltage/ Output format	
R	2.5 V ~ 3.3 V/LVPECL

⑧ Frequency tolerance/ Operating temperature	
K	±31.5 × 10^{-6}/-40 to +85 °C
L	±50 × 10^{-6}/-40 to +85 °C

⑨ Output standby type	
F	Fix (OUT="L", OUTN="H")
Z	High-Z

External dimensions (Unit: mm)

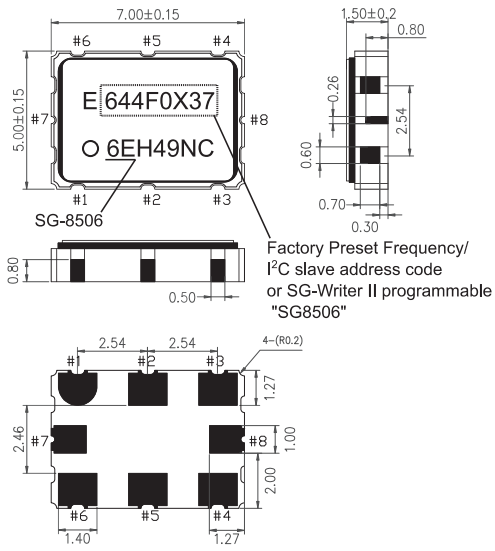

Pin	Connection
1	NC
2	OE
3	GND
4	OUT
5	OUTN
6	Vcc
7	SDA
8	SCL

Footprint (Recommended) (Unit: mm)

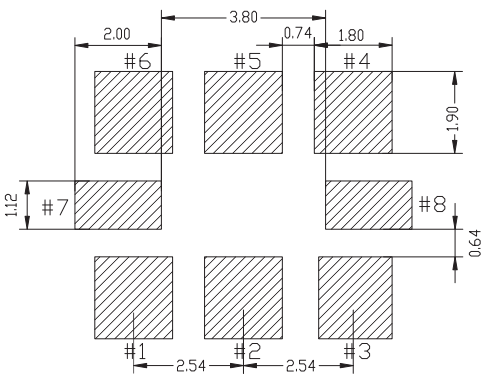

In order to achieve optimum jitter performance, it is recommended that the capacitor (0.1 μF + 10 μF) between V_{CC} and GND pin should be placed as close to the V_{CC} pin as possible.

Block diagram

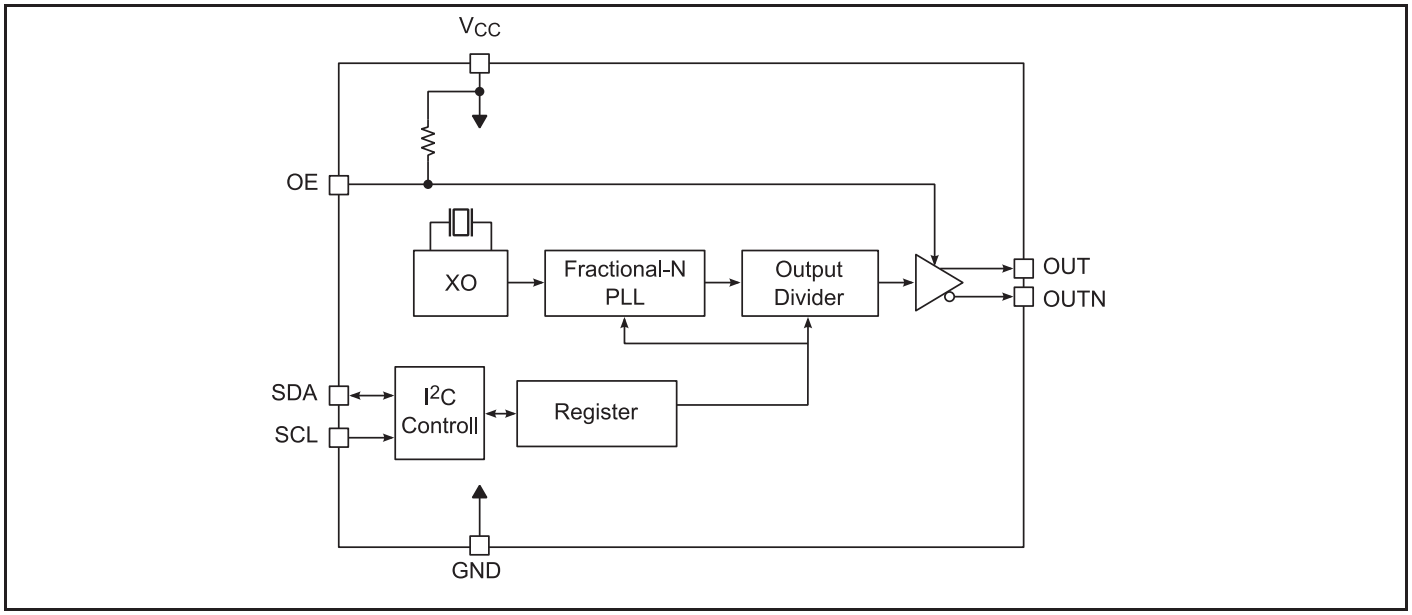

Phase Noise

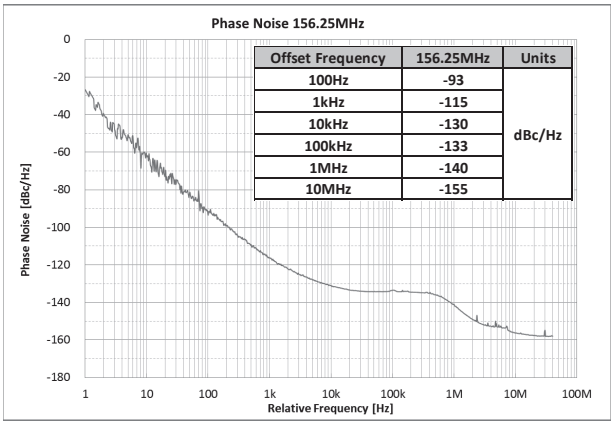

Offset Frequency	156.25MHz	Units
100Hz	-93	dBc/Hz
1kHz	-115	
10kHz	-130	
100kHz	-133	
1MHz	-140	
10MHz	-155	

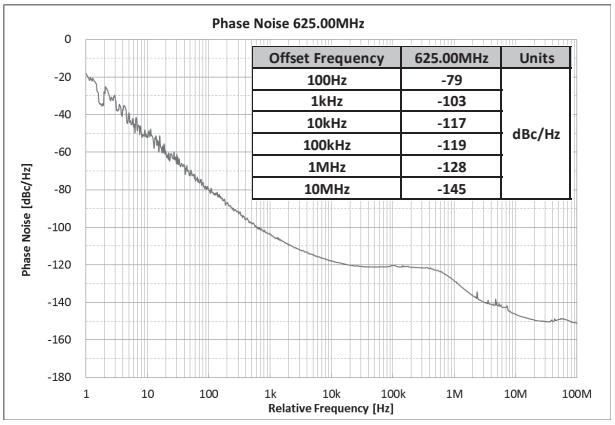

Offset Frequency	625.00MHz	Units
100Hz	-79	dBc/Hz
1kHz	-103	
10kHz	-117	
100kHz	-119	
1MHz	-128	
10MHz	-145	

Phase Jitter

	Offset Frequency	100.00 MHz	125.00 MHz	156.25 MHz	250.00 MHz	312.50 MHz	500.00 MHz	625.00 MHz
Phase jitter *2 Typ.	12 kHz to 20 MHz	0.31 ps	0.30 ps	0.26 ps	0.26 ps	0.29 ps	0.28 ps	0.29 ps

*2 In order to achieve optimum jitter performance, it is recommended that the capacitor (0.1 μF + 10 μF) between V_{CC} and GND pin should be placed as close to the V_{CC} pin as possible.

Dual or Quad Selectable Programmable Crystal Oscillator
Output: LV-PECL

SG-8503CA / SG-8504CA

Pb Free
RoHS Compliant

Product Number
SG-8503CA : X1G005011xxxx00
SG-8504CA : X1G005021xxxx00

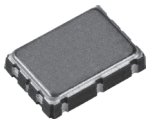
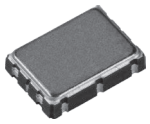

- Dual frequency Selectable: SG-8503CA, 7.0 × 5.0 × 1.5 mm (6 pins)
- Quad frequency Selectable: SG-8504CA, 7.0 × 5.0 × 1.5 mm (8 pins)
- Frequency range: 50 MHz to 800 MHz
- Supply voltage: 2.5 V to 3.3 V

Features
- User-specified two (FSEL) or four (FSEL0, FSEL1) startup frequencies
- High frequency fundamental tone crystal, Low jitter PLL technology
- Available field oscillator programmer "SG-Writer Ⅱ"

Application
- OTN, BTS, Test Instrument

Specifications (characteristics)

Item	Symbol	Specifications	Conditions / Remarks
Output frequency range	fo	50 MHz to 800 MHz	-
Supply voltage	V_{CC}	2.5 V - 0.125 V to 3.3 V + 0.33 V	-
Storage temperature	T_stg	-55 ºC to +125 ºC	Store as bare product after packing
Operating temperature	T_use	-40 ºC to +85 ºC	-
Frequency tolerance *1	f_tol	K : ±31.5 × 10^{-6}	Customized Product (Option)
		L : ±50 × 10^{-6}	
Current consumption	I_{CC}	90 mA Max.	OE Active, L_ECL = 50 Ω
Disable current	I_dis	40 mA Max.	OE Inactive, Output Standby: Hi-Z mode
		70 mA Max.	OE Inactive, Output Standby: Fix mode
Symmetry	SYM	45 % to 55 %	At outputs crossing point
Output voltage	V_{OH}	V_{CC} - 1.025 V Min.	DC characteristics
	V_{OL}	V_{CC} - 1.62 V Max.	
Output load condition	L_ECL	50 Ω	Termination to V_{CC} - 2.0 V
Input voltage	V_{IH}	70% V_{CC} Min.	SG-8503CA : OE, FSEL SG-8504CA : OE, FSEL0, FSEL1
	V_{IL}	30% V_{CC} Max.	
Rise time / Fall time	tr / tf	400 ps Max.	Between 20% and 80% of (V_{OH} - V_{OL})
Start-up time	t_str	10 ms Max.	Time at minimum supply voltage to be 0 s
Setting time for frequency change	t_{SET1}	1.5 ms Max.	SG-8503CA : From setting FSEL pin to output new frequency SG-8504CA : From setting FSEL0 / FSEL1 pin to output new frequency

*1 Frequency tolerance includes initial frequency tolerance, temperature variation, supply voltage change, reflow drift and 10 years aging at +25 ºC.

Product Name (Standard form) SG-8503 CA 156MHz 625MHz A P R L Z
① ② ③ ④ ⑤ ⑥ ⑦ ⑧ ⑨
① Model, ② Package type,
③ Frequeny-0 (50 ~ 800 MHz), ④ Frequency-1 (50 ~ 800 MHz), ⑤ Internal crystal frequency, ⑥ Output enable pin Polarity,
⑦ Supply voltage/Output format, ⑧ Frequency tolerance/Operating temperature, ⑨ Output standby type

Product Name (Standard form) SG-8504 CA 156.2MHz nnnn A P R L Z
① ② ③ ④ ⑤ ⑥ ⑦ ⑧ ⑨
① Model, ② Package type,
③ Frequeny-0 (50 ~ 800 MHz), ④ Parameter identifier, ⑤ Internal crystal frequency, ⑥ Output enable pin Polarity,
⑦ Supply voltage/Output format, ⑧ Frequency tolerance/Operating temperature, ⑨ Output standby type

⑤ Internal crystal frequency	
A	114.1444 MHz

⑥ Output enable pin Polarity	
P	Active High
Q	Active Low

⑦ Supply voltage/ Output format	
R	2.5 V ~ 3.3 V/LVPECL

⑧ Frequency tolerance/ Operating temperature	
K	±31.5 × 10^{-6}/-40 to +85 °C
L	±50 × 10^{-6}/-40 to +85 °C

⑨ Output standby type	
F	Fix (OUT="L", OUTN="H")
Z	High-Z

Phase Jitter

	Offset Frequency	100.00 MHz	125.00 MHz	156.25 MHz	250.00 MHz	312.50 MHz	500.00 MHz	625.00 MHz
Phase jitter *2 Typ.	12 kHz to 20 MHz	0.31 ps	0.30 ps	0.26 ps	0.26 ps	0.29 ps	0.28 ps	0.29 ps

*2 In order to achieve optimum jitter performance, it is recommended that the capacitor (0.1 μF + 10 μF) between V_{CC} and GND pin should be placed as close to the V_{CC} pin as possible.

Phase Noise

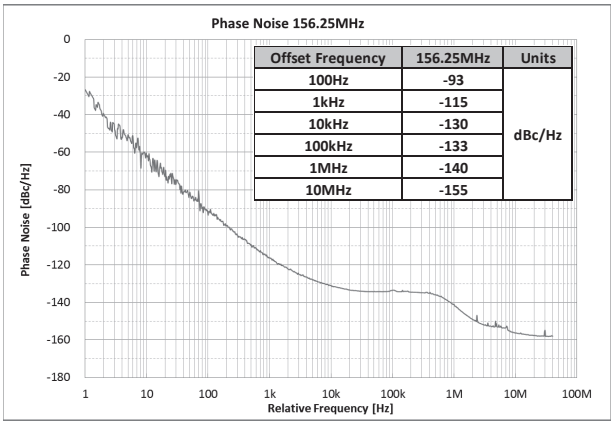

Offset Frequency	156.25MHz	Units
100Hz	-93	dBc/Hz
1kHz	-115	
10kHz	-130	
100kHz	-133	
1MHz	-140	
10MHz	-155	

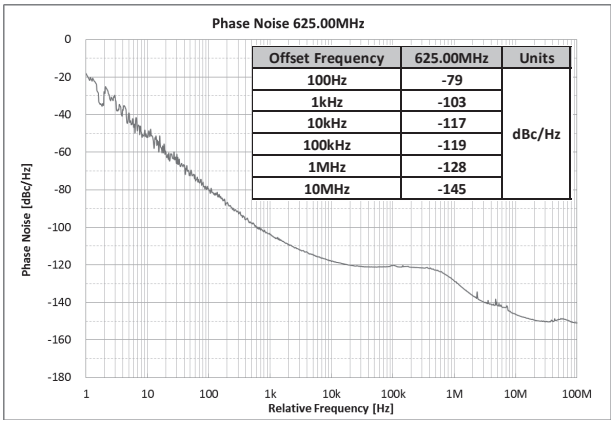

Offset Frequency	625.00MHz	Units
100Hz	-79	dBc/Hz
1kHz	-103	
10kHz	-117	
100kHz	-119	
1MHz	-128	
10MHz	-145	

Block diagram

SG-8503CA

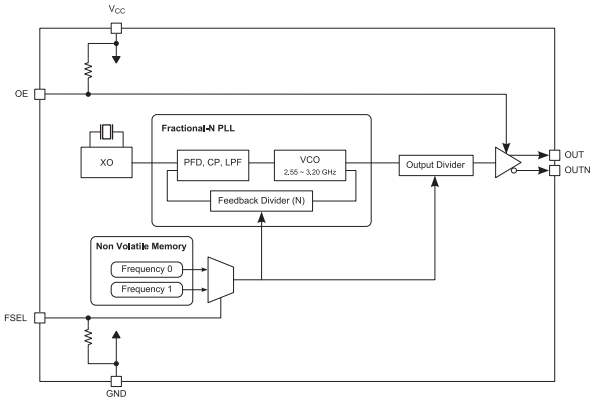

SG-8504CA

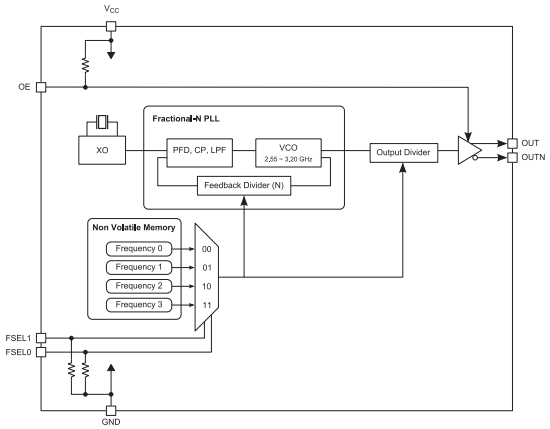

External dimensions (Unit: mm)

SG-8503CA

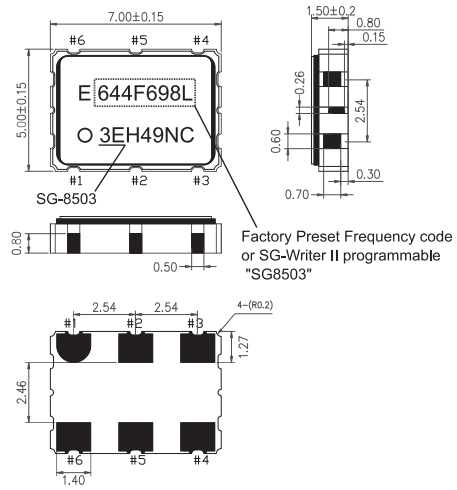

SG-8504CA

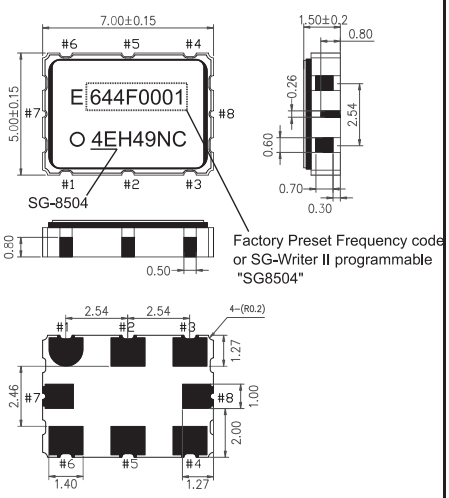

Pin	Connection
1	OE
2	FSEL (L = Frequency-0, H = Frequency-1)
3	GND
4	OUT
5	OUTN
6	Vcc

Pin	Connection	Pin	Connection
1	NC	5	OUTN
2	OE	6	Vcc
3	GND	7	FSEL0
4	OUT	8	FSEL1

FSEL1, FSEL0	Output Frequency
LL	Frequency-0
LH	Frequency-1
HL	Frequency-2
HH	Frequency-3

Footprint (Recommended)(Unit: mm)

SG-8503CA

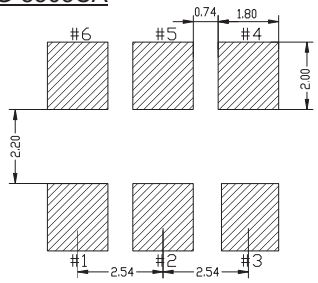

SG-8504CA

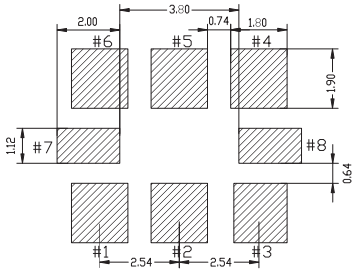

In order to achieve optimum jitter performance, it is recommended that the capacitor (0.1 μF + 10 μF) between V_{CC} and GND pin should be placed as close to the V_{CC} pin as possible.

High Precision Oscillator (TCXO / VC-TCXO)

Size [mm]	Clipped sine wave	CMOS output
3.2 x 2.5 mm	For Industrial / Consumer (+85 °C Operation, H-Shape) - 3.2 x 2.5 mm: TG-5006CE	For Industrial / Consumer (+85 °C Operation, H-Shape) - 3.2 x 2.5 mm: TG3225CEN - 2.5 x 2.0 mm: TG2520CEN 11 Standard frequencies: 12 / 16 / 24 / 25 / 26 / 27 / 32 / 36 / 38.4 / 39 / 48 / 40 MHz
2.5 x 2.0 mm	- 2.5 x 2.0 mm: TG2520SMN - 2.0 x 1.6 mm: TG2016SMN SMN Series 18 Standard frequencies: 16 / 16.368 / 16.369 / 19.2 / 20 / 24 / 25 / 25.6 / 26 / 27 / 27.6 / 30 / 32 / 38.4 / 40 / 48 / 50 / 52 MHz	
2.0 x 1.6 mm	For Automotive (AEC-Q100, Single-seal) Operating Temp. Max. SKA: +105 °C / SLA: +85 °C - 2.0 x 1.6 mm: TG2016SKA 26 / 49.58 MHz - 2.0 x 1.6 mm: TG2016SLA 26 / 49.58 MHz	
1.6 x 1.2 mm	For Industrial / Consumer (+105 °C Operation, ST-Function, Single-seal) - 2.0 x 1.6 mm: TG2016SLN 26 / 38.4 MHz - 1.6 x 1.2 mm: TG1612SLN 26 MHz	

►Output: Clipped sine wave

P	Model	Size [mm]	Nominal frequency range	Frequency tolerance (× 10^{-6})	Frequency / Temperature Characteristics (× 10^{-6})	Operating temperature [°C]	Supply voltage [V]	Current consumption Max. [mA]	Output load condition	Output control
71	**TG2016SMN**	2.0 × 1.6 × 0.73t	10 MHz 55 MHz	±1.5	±0.5	-40 to +85	1.8 ± 0.1 2.8 ± 5 % 3.0 ± 5 % 3.3 ± 5 %	1.5 (≤ 26 MHz) 1.8 (≤ 40 MHz) 2.0 (≤ 50 MHz) 2.1 (≤ 55 MHz)	10 kΩ//10 pF	-
	TG2520SMN	2.5 × 2.0 × 0.8t								
72	**TG1612SLN**	1.6 × 1.2 × 0.45t	13 MHz 55.2 MHz	±2.0	±0.5 (≤ 85 °C) ±5.0 (≤ 105 °C)	-40 to +105	1.8 ± 0.1 2.8 ± 5 % 3.0 ± 5 % 3.3 ± 5 %	1.7 (≤ 26 MHz) 2.0 (≤ 38.4 MHz) 2.5 (≤ 55.2 MHz)	10 kΩ//10 pF	ST
73	**TG2016SLN**	2.0 × 1.6 × 0.7t	10 MHz 55.2 MHz					1.7 (≤ 26 MHz) 2.0 (≤ 38.4 MHz) 2.5 (≤ 55.2 MHz)		
Automotive	**TG2016SKA (AEC-Q100)**	2.0 × 1.6 × 0.7t	13 MHz 55 MHz	±2.0	±0.5	-40 to +105	1.8 ± 0.1 3.3 ± 5 %	2.0 (≤ 40 MHz) 2.5 (≤ 55 MHz)	10 kΩ//10 pF	ST
Automotive	**TG2016SLA (AEC-Q100)**	2.0 × 1.6 × 0.7t	13 MHz 55 MHz	±2.0	±0.5	-40 to +85	1.8 ± 0.1 3.3 ± 5 %	2.0 (≤ 40 MHz) 2.5 (≤ 55 MHz)	10 kΩ//10 pF	ST
74	**TG-5006CJ**	2.0 × 1.6 × 0.73t	13 MHz 52 MHz	±2.0	±0.5	-30 to +85	1.8 ± 0.1 2.8 ± 5 % 3.0 ± 5 % 3.3 ± 5 %	1.5 (≤ 26 MHz) 2.0 (> 26 MHz)	10 kΩ//10 pF	-
	TG-5006CG	2.5 × 2.0 × 0.8t								
	TG-5006CE	3.2 × 2.5 × 0.9t	13 MHz 20 MHz 26 MHz 40 MHz							

►Output: CMOS

P	Model	Size [mm]	Nominal frequency range	Frequency tolerance (× 10^{-6})	Frequency / Temperature Characteristics (× 10^{-6})	Operating temperature [°C]	Supply voltage [V]	Current consumption Max. [mA]	Output load condition	Output control
75	**TG2520CEN**	2.5 × 2.0 × 0.8t	12 MHz 52 MHz	±2.0	±2.0	-40 to +85	2.8 ± 5 % 3.0 ± 5 % 3.3 ± 5 %	4.0 (≤ 26 MHz) 6.0 (≤ 39 MHz) 6.5 (≤ 52 MHz)	15pF	-
	TG3225CEN	3.2 × 2.5 × 0.9t	12 MHz 52 MHz	±2.0	±2.0	-40 to +85	2.8 ± 5 % 3.0 ± 5 % 3.3 ± 5 %	4.0 (≤ 26 MHz) 6.0 (≤ 39 MHz) 6.5 (≤ 52 MHz)	15pF	-

Wired network/Wireless network Solutions (TCXO / VC-TCXO)

Size [mm]	TCXO	VC-TCXO
7.0 x 5.0 mm	**TG7050SKN / TG7050SMN** Clipped sine wave, +/- **100 x 10^{-9}** at -40 °C to +**105 °C** SKN: 10pin, SMN: 4pin From 10MHz to 54MHz	
	TG7050CKN / TG7050CMN CMOS, +/- **100 x 10^{-9}** at -40 °C to +**105 °C** CKN: 10pin, CMN: 4pin From 10MHz to 54MHz	
	TG-5510CA / TG-5511CA Clipped sine wave/CMOS, +/- 280 x 10^{-9} at -40 °C to +85 °C TG-5510CA: 10pin, TG-5511CA: 4pin From 10MHz to **54MHz**	
5.0 x 3.2 mm	**TG5032SKN / TG5032SMN** Clipped sine wave, +/- **100 x 10^{-9}** at -40 °C to +**105 °C** SKN: 10pin, SMN: 4pin From 10MHz to 54MHz	**TG5032SGN / TG5032SFN** Clipped sine wave, +/- 100 x 10^{-9} at -40 °C to +85 °C SGN: 10pin, SFN: 4pin From 10MHz to 40MHz
	TG5032CKN / TG5032CMN CMOS, +/- **100 x 10^{-9}** at -40 °C to +**105 °C** CKN: 10pin, CMN: 4pin From 10MHz to 54MHz	**TG5032CGN / TG5032CFN** CMOS, +/- 100 x 10^{-9} at -40 °C to +85 °C CGN: 10pin, CFN: 4pin From 10MHz to 40MHz
	TG-5510CB / TG-5511CB Clipped sine wave/CMOS, +/- 280 x 10^{-9} at -40 °C to +85 °C TG-5510CB: 10pin, TG-5511CB: 4pin From 10MHz to **54MHz**	

►Output: Clipped sine wave or CMOS

P	Model	Size [mm]	Nominal frequency range	Frequency tolerance (× 10^{-6})	Frequency / Temperature Characteristics (× 10^{-6})	Operating temperature [°C]	Supply voltage [V]	Current consumption Max. [mA]	Output load condition	Output control
76	**TG7050CKN (CMOS)**	7.0 × 5.0 × 1.5t (10 pin)	10 MHz 54 MHz	±1.0	±0.1	-40 to +105	3.3 ±5 %	7.0 (≤ 26 MHz) 9.0 (≤ 40 MHz) 10.0 (≤ 54 MHz)	15 pF	OE
	TG7050SKN (Clipped sine wave)							6.0	10 kΩ//10 pF	
	TG7050CMN (CMOS)	7.0 × 5.0 × 1.5t (4 pin)	10 MHz 54 MHz	±1.0	±0.1	-40 to +105	3.3 ±5 %	7.0 (≤ 26 MHz) 9.0 (≤ 40 MHz) 10.0 (≤ 54 MHz)	15 pF	-
	TG7050SMN (Clipped sine wave)							6.0	10 kΩ//10 pF	
77	**TG-5510CA (CMOS)**	7.0 × 5.0 × 1.5t (10 pin)	10 MHz 54 MHz	±1.0	±0.28	-40 to +85 (+105 option)	3.3 ±5 %	7.0 (≤ 26 MHz) 9.0 (≤ 40 MHz) 10.0 (≤ 54 MHz)	15 pF	OE
	TG-5510CA (Clipped sine wave)							6.0	10 kΩ//10 pF	
	TG-5511CA (CMOS)	7.0 × 5.0 × 1.5t (4 pin)						7.0 (≤ 26 MHz) 9.0 (≤ 40 MHz) 10.0 (≤ 54 MHz)	15 pF	-
	TG-5511CA (Clipped sine wave)							6.0	10 kΩ//10 pF	
	TG5032CKN (CMOS)	5.0 × 3.2 × 1.45t (10 pin)	10 MHz 54 MHz	±1.0	±0.1	-40 to +105	3.3 ±5 %	7.0 (≤ 26 MHz) 9.0 (≤ 40 MHz) 10.0 (≤ 54 MHz)	15 pF	OE
	TG5032SKN (Clipped sine wave)							6.0	10 kΩ//10 pF	
	TG5032CMN (CMOS)	5.0 × 3.2 × 1.45t (4 pin)	10 MHz 54 MHz	±1.0	±0.1	-40 to +105	3.3 ±5 %	7.0 (≤ 26 MHz) 9.0 (≤ 40 MHz) 10.0 (≤ 54 MHz)	15 pF	-
	TG5032SMN (Clipped sine wave)							6.0	10 kΩ//10 pF	
78	**TG-5510CB (CMOS)**	5.0 × 3.2 × 1.45t (10 pin)	10 MHz 54 MHz	±1.0	±0.28	-40 to +85 (+105 option)	3.3 ±5 %	7.0 (≤ 26 MHz) 9.0 (≤ 40 MHz) 10.0 (≤ 54 MHz)	15 pF	OE
	TG-5510CB (Clipped sine wave)							6.0	10 kΩ//10 pF	
	TG-5511CB (CMOS)	5.0 × 3.2 × 1.45t (4 pin)						7.0 (≤ 26 MHz) 9.0 (≤ 40 MHz) 10.0 (≤ 54 MHz)	15 pF	-
	TG-5511CB (Clipped sine wave)							6.0	10 kΩ//10 pF	

P	Model	Size [mm]	Nominal frequency range	Frequency tolerance (× 10^{-6})	Frequency / Temperature Characteristics (× 10^{-6})	Operating temperature [°C]	Supply voltage [V]	Current consumption Max. [mA]	Output load condition	Output control
80	**TG5032CGN (CMOS)**	5.0 × 3.2 × 1.45t (10 pin)	10 MHz 40 MHz	±1.0	±0.1	-40 to +85	2.375 to 3.63	5.0 (≤ 26 MHz) 6.0 (> 26 MHz)	15 pF	OE
	TG5032SGN (Clipped sine wave)							5.0	10 kΩ//10 pF	
79	**TG5032CFN (CMOS)**	5.0 × 3.2 × 1.45t (4 pin)	10 MHz 40 MHz	±1.0	±0.1	-40 to +85	2.375 to 3.63	5.0 (≤ 26 MHz) 6.0 (> 26 MHz)	15 pF	-
	TG5032SFN (Clipped sine wave)							5.0	10 kΩ//10 pF	

VC-TCXO / TCXO
HIGH STABILITY / Low noise

Product Number
TG2016SMN : X1G005441xxxx25
TG2520SMN : X1G005421xxxx27

TG2016SMN / TG2520SMN

- Output frequency : 10 MHz to 55MHz
- Supply voltage : 1.8 V Typ./ 2.8 V Typ./ 3.0 V Typ./ 3.3 V Typ.
- Frequency / temperature characteristics
  : ±0.5 × 10^{-6} Max. (-40 °C to +85 °C)
  : ±2.0 × 10^{-6} Max. (-40 °C to +85 °C)
- External dimensions: 2.0 × 1.6 × 0.73 mm / 2.5 × 2.0 × 0.8 mm
- Applications : GPS, RF
  Wireless communication devices
  (LTE, WiMAX, Wi-Fi, W-LAN, IoT other)
- Features : Low noise

TG2016SMN
(2.0 × 1.6 × 0.73 mm)

TG2520SMN
(2.5 × 2.0 × 0.8 mm)

Specifications (characteristics)

Item	Symbol	VC-TCXO	TCXO	Conditions / Remarks
Output frequency range	f0	10 MHz to 55MHz		
		16, 16.368, 16.369, 19.2, 20, 24, 25, 26, 27, 27.6, 30, 32, 38.4, 40, 48, 50, 52 MHz		Standard frequency
Supply voltage	Vcc	1.8 V ±0.1 V / 2.8 V ±5 % / 3.0 V ±5 % / 3.3 V ±5 %		Supply voltage range :1.7 V to 3.63 V
Storage temperature range	T_stg	-40 °C to +90 °C		Storage as single product.
Operating temperature range	T_use	G: -40 °C to +85 °C		
Frequency tolerance	f_tol	±1.5 × 10^{-6} Max.		After reflow, +25 °C
Frequency/temperature characteristics	f0-Tc	C: ±0.5 × 10^{-6} Max. / G: -40 °C to +85 °C F: ±2.0 × 10^{-6} Max. / G: -40 °C to +85 °C		Standard stability version
Frequency/load coefficient	f0-Load	±0.1 × 10^{-6} Max.		10 kΩ // 10 pF ±10 %
Frequency/voltage coefficient	f0-Vcc	±0.1 × 10^{-6} Max.		Vcc ± 5 %
Frequency aging	f_age	±0.5 × 10^{-6} Max.		+25 °C, First year, 10MHz, 12 MHz≤ f0 ≤20 MHz, 24 MHz≤ f0 ≤40 MHz
		±1.5 × 10^{-6} Max.		+25 °C ,First year, 10 MHz< f0 <12 MHz, 20 MHz< f0 <24 MHz, 40 MHz< f0 ≤55 MHz
Current consumption	Icc	1.5 mA Max.		10 MHz≤ f0 ≤26 MHz
		1.8 mA Max.		26 MHz< f0 ≤40 MHz
		2.0 mA Max.		40 MHz< f0 ≤50 MHz
		2.1 mA Max.		50 MHz< f0 ≤55 MHz
Input impedance	Zin	500 kΩ Min.	-	Vc - GND (DC)
Frequency control range	f_cont	±8.0 × 10^{-6} to ±12.0 × 10^{-6}	-	B: Vc =0.9 V ±0.6 V (Vcc =1.8 V) or C: Vc =1.4 V ±1.0 V (Vcc =2.8 V) or D: Vc =1.5 V ±1.0 V (Vcc =3.0 V) or E: Vc =1.65 V ±1.0 V (Vcc =3.3 V)
Frequency change polarity	f_cp	Positive polarity	-	
Symmetry	SYM	45 % to 55 %		GND level (DC cut)
Output voltage	Vpp	0.8 V Min.		Peak to Peak
Start-up time	t_str	1.0 ms Max.		T=0 at 90% Vcc
Output load	Load_R	10 kΩ		DC cut capacitor = 0.01 μF
	Load_C	10 pF		

* Note : Please contact us for requirements not listed in this specification.

④Supply voltage[Vcc] ,⑧Vc function[Vc] (Symbol table)					
Voltage [V]	TCXO	VC-TCXO			
④Vcc (Typ.)	E:1.8 M:2.8 to 3.3	E:1.8	B:2.8	A:3.0	C:3.3
⑧Vc (Typ.)	N: Non	B 0.9	C:1.4	D 1.5	E 1.65

Product Name (Standard form)

TG2016	SMN	26.000000MHz	E	C	G	N	N	M
①	②	③	④	⑤	⑥	⑦	⑧	⑨

①Model(TG2016, TG2520)
②Output (S: Clipped sine wave) ③Frequency
④Supply voltage (Refer to symbol table) ⑤Frequency / temperature characteristics (C: ±0.5 × 10^{-6} Max., F: ±2.0 × 10^{-6} Max.)
⑥Operating temperature (G: -40 °C to +85 °C) ⑦ST function (N: Non)
⑧Vc function(Refer to symbol table , A: Vc =any) ⑨Internal identification code ("M" is default)

External dimensions (Unit:mm)

TG2016SMN

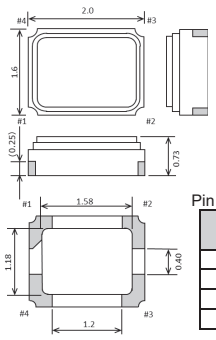

Pin map

Pin	Connection	
	VC-TCXO	TCXO
1	Vc	N.C.*1
2	GND	
3	OUT	
4	Vcc	

*1) Please keep "N.C." pin OPEN condition or GND connection. "N.C." pin doesn't work as a ground pin.

TG2520SMN

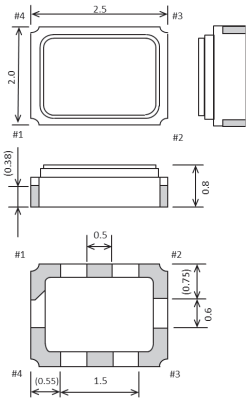

Footprint (Recommended) (Unit:mm)

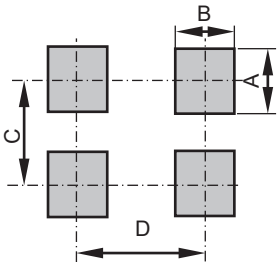

Size

	TG2016SMN (2.0x1.6mm)	TG2520SMN (2.5x2.0mm)
A	0.75	1.0
B	0.6	0.8
C	1.13	1.4
D	1.65	2.1

For stable operation, please add a bypass Capacitor (0.01uF to 0.1uF) between Vcc and GND. Please place it as close to TCXO as possible.

TCXO / TCXO-Standby
105 ºC High temperature range

Product Number
TG1612SLN : X1G005721xxxx16

TG1612SLN

- Output frequency : 13 MHz to 55.2 MHz
- Supply voltage : 1.8 V Typ./ 2.8 V Typ./ 3.0 V Typ./ 3.3 V Typ.
- Frequency / temperature characteristics
  : ±0.5 × 10^{-6} Max. (-40 °C to +85 °C) and
  ±5.0 × 10^{-6} Max. (+85 °C to +105 °C)
- External dimensions: 1.6 × 1.2 × 0.45 mm Max.
- Applications : Smart phone, LPWA module
  Wireless communication devices
- Features : 105 °C High temp, Standby function ($\overline{ST}$)

TG1612SLN
(1.6 × 1.2 × 0.45 mm)

Specifications (characteristics)

Item	Symbol	TCXO	TCXO-Standby	Conditions / Remarks
Output frequency range	f_o	13 MHz to 55.2 MHz		
		26 MHz		Standard frequency
Supply voltage	V_{CC}	1.8 V ±0.1 V / 2.8 V ±5 % / 3.0 V ±5 % / 3.3 V ±5 %		Supply voltage range :1.7 V to 3.63 V
Storage temperature range	T_stg	-40 °C to +125 °C		Storage as single product.
Operating temperature range	T_use	G: -40 °C to +85 °C / H: -40 °C to +105 °C		
Frequency tolerance	f_tol	±2.0 × 10^{-6} Max.		After reflow, +25 °C
Frequency/temperature characteristics	f_0-Tc	C: ±0.5 × 10^{-6} Max. / -40 °C to +85 °C W: And ±5.0 × 10^{-6} Max. / +85 °C to +105 °C (Option)		Standard stability version Customized product (Option)
Frequency/load coefficient	f_0-Load	±0.2 × 10^{-6} Max.		10 kΩ // 10 pF ±10 %
Frequency/voltage coefficient	f_0-V_{CC}	±0.2 × 10^{-6} Max.		V_{CC} ± 5 %
Frequency aging	f_age	±1.0 × 10^{-6} Max.		+25 °C, First year, 13 MHz≤ f_0 ≤20 MHz, 26 MHz≤ f_0 ≤40 MHz
		±1.5 × 10^{-6} Max.		+25 °C ,First year, 20 MHz< f_0 <26 MHz 40 MHz< f_0 ≤55.2 MHz
Current consumption	I_{CC}	1.5 mA Max. 1.7 mA Max. 2.0 mA Max. 2.5 mA Max.		13 MHz < f_0 ≤26 MHz (-40 to +85 °C) 13 MHz < f_0 ≤26 MHz (-40 to +105 °C) 26 MHz < f_0 ≤38.4 MHz (-40 to +105 °C) 38.4 MHz< f_0 ≤55.2 MHz (-40 to +105 °C)
Stand-by current	I_std	-	3 µA Max.	$\overline{ST}$ = GND
Input voltage	V_{IH}	-	80 % Vcc Min.	$\overline{ST}$ terminal
	V_{IL}	-	20 % Vcc Max.	
Symmetry	SYM	40 % to 60 %		GND level (DC cut)
Output voltage	V_{PP}	0.8 V Min.		Peak to Peak
Start-up time	t_str	2.0 ms Max.		T=0 at 90 % Vcc
Output load	Load_R	10 kΩ		DC cut capacitor = 0.01 µF
	Load_C	10 pF		

* Note : Please contact us for requirements not listed in this specification.

Product Name (Standard form): TG1612 SLN 26.000000MHz E W H S N M
① ② ③ ④ ⑤ ⑥ ⑦ ⑧ ⑨

④Supply voltage[Vcc] ,⑧Vc function[Vc] (Symbol table)				
④,⑧Type: Function	Suffix symbol: Voltage(Typ.) [V]			
④Vcc: Common	E: 1.8	B: 2.8	A: 3.0	C: 3.3
⑧Vc:	N: Non			

①Model ②Output (S: Clipped sine wave)
③Frequency ④Supply voltage (Refer to symbol table)
⑤Frequency / temperature characteristics (C: ±0.5 × 10^{-6} Max., F: ±2.0 × 10^{-6} Max., W: ±0.5 × 10^{-6} Max. and ±5.0 × 10^{-6} Max.)
⑥Operating temperature (H: -40 °C to +105 °C, G: -40 °C to +85 °C) ⑦ST function (N: Non, S: Standby)
⑧Vc function(N: Non for TCXO, Standby mode) ⑨Internal identification code ("M" is default)

External dimensions (Unit:mm)

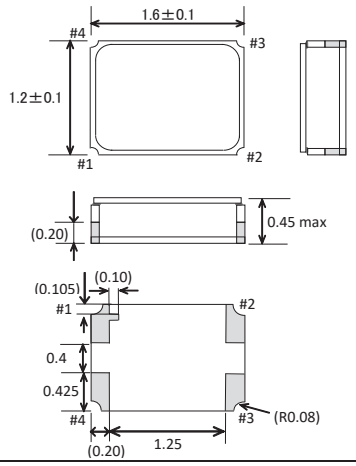

Pin map

Pin	Connection		
	VC-TCXO	TCXO	TCXO-Standby
1	Vc	N.C.*1	$\overline{ST}$
2	GND		
3	OUT		
4	Vcc		

*1) Please keep "N.C." pin OPEN condition or GND connection. "N.C." pin doesn't work as a ground pin.

Footprint (Recommended) (Unit:mm)

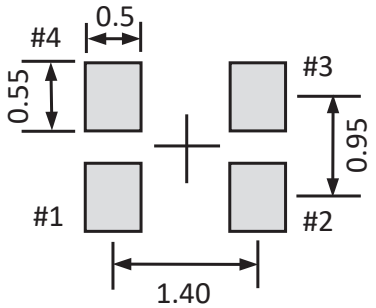

To maintain stable operation, provide a 0.01 uF to 0.1 uF by-pass capacitor at a location as near as possible to the power source terminal of the crystal product (between Vcc - GND).

TCXO / TCXO-Standby
105 ºC High temperature range

Product Number
TG2016SLN : X1G005731xxxx16

TG2016SLN

- Output frequency : 10 MHz to 55.2MHz
- Supply voltage : 1.8 V Typ./ 2.8 V Typ./ 3.0 V Typ./ 3.3 V Typ.
- Frequency / temperature characteristics
  : ±0.5 × 10^{-6} Max. (-40 °C to +85 °C) and
  ±5.0 × 10^{-6} Max. (+85 °C to +105 °C)
- External dimensions: 2.0 × 1.6 × 0.7 mm max
- Applications : GNSS, Industrial
  Wireless communication devices
- Features : 105 °C High temp, Stand-by function ($\overline{ST}$)

TG2016SLN
(2.0 × 1.6 × 0.7 mm)

Specifications (characteristics)

Item	Symbol	TCXO	TCXO-Standby	Conditions / Remarks
Output frequency range	f0	10 MHz to 55.2MHz		
		26, 38.4 MHz		Standard frequency
Supply voltage	Vcc	1.8 V ±0.1 V / 2.8 V ±5 % / 3.0 V ±5 % / 3.3 V ±5 %		Supply voltage range :1.7 V to 3.63 V
Storage temperature range	T_stg	-40 °C to +105 °C		Storage as single product.
Operating temperature range	T_use	G: -40 °C ~ +85 °C / H: -40 °C to +105 °C		
Frequency tolerance	f_tol	±2.0 × 10^{-6} Max.		After 3times reflow, +25 °C
Frequency/temperature characteristics	f0-Tc	C: ±0.5 × 10^{-6} Max. / -40 °C to +85 °C W: C and ±5.0 × 10^{-6} Max. / +85 °C to +105 °C (Option)		
Frequency/load coefficient	f0-Load	±0.2 × 10^{-6} Max.		10 kΩ // 10 pF ±10 %
Frequency/voltage coefficient	f0-Vcc	±0.2 × 10^{-6} Max.		Vcc ± 5 %
Frequency aging	f_age	±1.0 × 10^{-6} Max.		+25 °C, First year, 10 MHz≤ f0 ≤20 MHz, 26 MHz≤ f0 ≤40 MHz
		±1.5 × 10^{-6} Max.		+25 °C ,First year, 20 MHz< f0 <26 MHz 40 MHz< f0 ≤55.2 MHz
Current consumption	Icc	1.5 mA Max. 1.7 mA Max. 2.0 mA Max. 2.5 mA Max.		f0 ≤26 MHz (-40 to +85 °C) f0 ≤26 MHz (-40 to +105 °C) 10 MHz≤ f0 ≤38.4 MHz (-40 to +105 °C) 38.4MHz< f0 ≤55.2 MHz (-40 to +105 °C)
Stand-by current	I_std	-	3 µA Max.	$\overline{ST}$ = GND
Input voltage	V_{IH}	-	80% Vcc Min.	$\overline{ST}$ terminal
	V_{IL}	-	20 % Vcc Max.	
Symmetry	SYM	45 % to 55 %		GND level (DC cut)
Output voltage	Vpp	0.8 V Min. / 1.5 V Max.		Peak to Peak
Start-up time	t_str	2.0 ms Max.		T=0 at 90% Vcc
Output load	Load_R	10 kΩ		DC cut capacitor = 0.01 µF
	Load_C	10 pF		

* Note : Please contact us for requirements not listed in this specification.

④Supply voltage[Vcc] ,⑧Vc function[Vc] (Symbol table)				
Voltage [V]	TCXO			
④Vcc	E: 1.8	B: 2.8	A: 3.0	C: 3.3
⑧Vc	N: Non			

Product Name (Standard form): TG2016 SLN 26.000000MHz E W H S N M
① ② ③ ④ ⑤ ⑥ ⑦ ⑧ ⑨

①Model ②Output (S: Clipped sine wave)
③Frequency ④Supply voltage (Refer to symbol table)
⑤Frequency / temperature characteristics (C: ±0.5 × 10^{-6} Max., F: ±2.0 × 10^{-6} Max., W: ±0.5 × 10^{-6} Max. and ±5.0 × 10^{-6} Max.)
⑥Operating temperature (G: -40 °C ~ +85 °C, H: -40 °C to +105 °C) ⑦ST function (N: Non, S: Standby)
⑧Vc function(N: Non) ⑨Internal identification code ("M" is default)

External dimensions (Unit:mm)

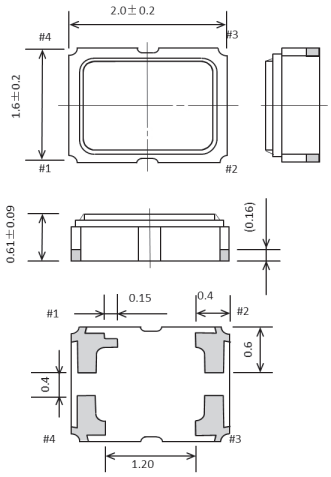

Pin map

Pin	Connection		
	VC-TCXO	TCXO	TCXO-Standby
1	Vc	N.C.*1	$\overline{ST}$
2	GND		
3	OUT		
4	Vcc		

*1) Please keep "N.C." pin OPEN condition or GND connection. "N.C." pin doesn't work as a ground pin.

Footprint (Recommended) (Unit:mm)

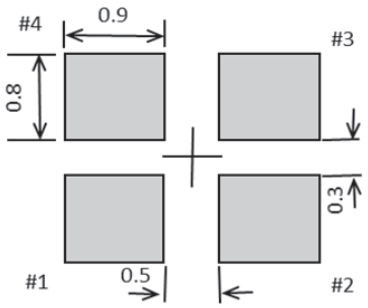

To maintain stable operation, provide a 0.01uF to 0.1uF by-pass capacitor at a location as near as possible to the power source terminal of the crystal product (between Vcc - GND).

TCXO/VC-TCXO
HIGH STABILITY

Pb Free
RoHS Compliant

Product Number
TG-5006CJ : X1G004131xxxx00
TG-5006CG : X1G004211xxxx00
TG-5006CE : X1G004201xxxx00

TG-5006CJ / CG / CE

TG-5006CJ
(2.0 × 1.6 × 0.73 mm)

TG-5006CG
(2.5 × 2.0 × 0.8 mm)

TG-5006CE
(3.2 × 2.5 × 0.9 mm)

- Frequency range : 13 to 52MH(TG-5006CJ/CG)
  13 to 20MHz, 26 to 40MHz(TG-5006CE)
- Supply voltage : 1.8 V Typ./ 2.8 V Typ./ 3.0 V Typ./ 3.3 V Typ.
- Frequency / temperature characteristics
  : ±0.5× 10^{-6} Max or ±2.0 × 10^{-6} Max.
- Applications : GPS, RF,
  Wireless communication devices
  (CDMA, WCDMA, LTE, WiMAX, other)
- Features : High stability

Specifications (characteristics)

Item	Symbol	VC-TCXO	TCXO	Conditions / Remarks
Output frequency range	f0	16.367667 MHz, 16.368 MHz, 16.369 MHz, 19.2 MHz, 26 MHz and 38.4 MHz		Standard frequency
		13.000 MHz to 52.000 MHz		TG-5006CJ/TG5006CG
		13.000 MHz to 20.000 MHz,26.000 MHz to 40.000 MHz		TG-5006CE
Supply voltage	Vcc	1.8 V ±0.1 V / 2.8 V ±5% / 3.0 V ±5% / 3.3 V ±5%		Supply voltage range : 1.7 V to 3.465 V
Storage temperature range	T_stg	-40 °C to +90 °C		Storage as single product.
Operating temperature range	T_use	-30 °C to +85 °C		
Frequency tolerance	f_tol	±2.0 ×10^{-6} Max.		After reflow, +25 °C
Frequency/temperature characteristics	f0-Tc	±0.5 × 10^{-6} Max. / -30 °C to +85 °C		High stability version for GPS
		±2.0 × 10^{-6} Max. / -30 °C to +85 °C		Standard stability version
Frequency/load coefficient	f0-Load	±0.2 × 10^{-6} Max.		10 kΩ // 10 pF ±10 %
Frequency/voltage coefficient	f0-Vcc	±0.2 ×10^{-6} Max.		Vcc ±5%
Frequency aging	f_age	±1.0 ×10^{-6} Max.		+25 °C , First year,13 MHz≦f0≦40 MHz
		±1.5 ×10^{-6} Max.		+25 °C , First year,40 MHz＜f0≦52 MHz
Current consumption	Icc	1.5 mA Max.		13 MHz≦f0≦26 MHz
		2.0 mA Max.		26 MHz＜f0≦52 MHz
Input impedance	Zin	500 kΩ Min.	—	Vc- GND (DC)
Frequency control range	f_cont	±8.0 × 10^{-6} to ±15.0 × 10^{-6}	—	Vc =0.9 V ±0.6 V (Vcc =1.8 V) or Vc =1.4 V ±1.0 V (Vcc =2.8 V) or Vc =1.5 V ±1.0 V (Vcc =3.0 V) or Vc =1.65 V ±1.0 V (Vcc =3.3 V)
Frequency change polarity	f_cp	Positive polarity	—	
Symmetry	SYM	40 % to 60 %		GND level (DC cut)
Output voltage	Vpp	0.8 V Min.		Peak to Peak
Start-up time	t_str	2.0 ms Max.		T=0 at 90% Vcc
Output load	Load_R	10 kΩ		DC cut capacitor = 0.01 μF
	Load_C	10 pF		

* Note : Please contact us for requirements not listed in this specification.

Product Name (Standard form): TG-5006 CJ-*** 19.200000MHz
① ② ③ ④
①Model ②Package type ③Spec segment (Please contact us) ④Frequency

External dimensions (Unit: mm)

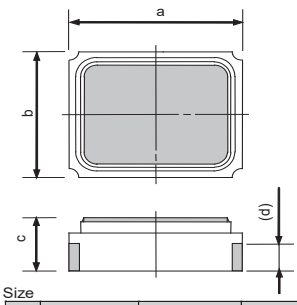

Size

	TG-5006CJ	TG-5006CG	TG-5006CE
a	2.0±0.15	2.5±0.2	3.2±0.2
b	1.6±0.15	2.0±0.2	2.5±0.2
c	0.73±0.07	0.8±0.1	0.9±0.1
(d)	0.27	0.38	0.46

Pin map

Pin	Connection	
	VC-TCXO	TCXO
1	Vc	N.C.*1
2	GND	
3	OUT	
4	Vcc	

*1) Please keep "N.C." pin OPEN condition or GND connection. "N.C." pin doesn't work as a ground pin.

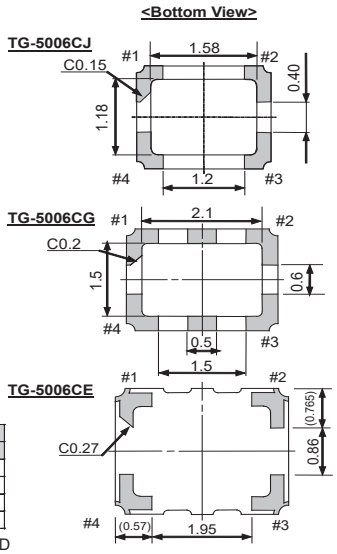

Footprint (Recommended) (Unit: mm)

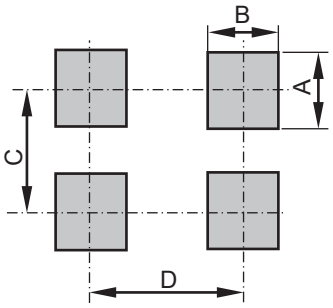

Size

	TG-5006CJ (2.0×1.6mm)	TG-5006CG (2.5×2.0mm)	TG-5006CE (3.2×2.5mm)
A	0.75	1.0	1.15
B	0.6	0.8	0.85
C	1.13	1.4	1.6
D	1.65	2.1	2.6

For stable operation, please add a bypass capacitor (0.01uF to 0.1uF) between Vcc and GND. Please place it as close to TCXO as possible.

VC-TCXO/TCXO
HIGH STABILITY, CMOS OUTPUT

TG3225CEN
TG2520CEN

Pb Free
RoHS Compliant

Product Number
TG3225CEN : X1G005101xxxxxx
TG2520CEN : X1G005161xxxxxx

TG3225CEN
(3.2 × 2.5 × 0.9 mm)

TG2520CEN
(2.5 × 2.0 × 0.8 mm)

- •Output frequency : 12 MHz to 52MHz
- •Supply voltage : 2.8 V Typ./ 3.0 V Typ./ 3.3 V Typ.
- •Frequency / temperature characteristics : ±2.0 × 10^{-6} Max.
- •External dimensions: 3.2 × 2.5 × 0.9 mm / 2.5 × 2.0 × 0.8 mm
- •Applications : Reference clock for measurement machine
  Wireless communication devices
  (Smart meter, Telemeter, other)
- •Features : High stability, CMOS output

Specifications (characteristics)

Item	Symbol	VC-TCXO	TCXO	Conditions / Remarks
Output frequency range	f_0	12 MHz to 52MHz		
		12MHz, 20MHz, 24MHz, 25MHz, 26MHz, 27MHz, 32MHz, 36MHz, 38.4MHz, 39MHz and 40MHz		Standard frequency
Supply voltage	V_{CC}	2.8 V ±5 % / 3.0 V ±5 % / 3.3 V ±5 %		Supply voltage range :2.375 V to 3.63 V
Storage temperature range	T_stg	-40 °C to +90 °C		Storage as single product.
Operating temperature range	T_use	G: -40 °C to +85 °C		
Frequency tolerance	f_tol	±2.0 × 10^{-6} Max.		After reflow, +25 °C
Frequency/temperature characteristics	f_0-Tc	F: ±2.0 × 10^{-6} Max. / G: -40 °C to +85 °C		Standard stability version
Frequency/load coefficient	f_0-Load	±0.2 × 10^{-6} Max.		15 pF ±10 %
Frequency/voltage coefficient	f_0-V_{CC}	±0.3 × 10^{-6} Max.		V_{CC} ± 5 %
Frequency aging	f_age	±1.0 × 10^{-6} Max.		+25 °C, First year, 12 MHz≤ f_0 ≤20 MHz 24 MHz≤ f_0 ≤40 MHz
		±1.5 × 10^{-6} Max.		+25 °C ,First year, 20 MHz< f_0< 24 MHz 40 MHz< f_0 ≤52 MHz
Current consumption	I_{CC}	4.0 mA Max.		12 MHz ≤ f_0 ≤ 26 MHz
		6.0 mA Max.		26 MHz <f_0 ≤ 39 MHz
		6.5 mA Max.		39 MHz <f_0 ≤ 52 MHz
Input impedance	Zin	500 kΩ Min.	-	V_C - GND (DC)
Frequency control range	f_cont	±8.0 × 10^{-6} to ±15.0 × 10^{-6}	-	C: V_C =1.4 V ±1.0 V (V_{CC} =2.8 V) or D: V_C =1.5 V ±1.0 V (V_{CC} =3.0 V) or E: V_C =1.65 V ±1.0 V (V_{CC} =3.3 V)
Frequency change polarity	f_cp	Positive polarity	-	
Symmetry	SYM	45 % to 55 %		50 % V_{CC} level, L_CMOS ≤ 15 pF
Output voltage	V_{OH}	90 % V_{CC} Min.		
	V_{OL}	10 % V_{CC} Max.		
Start-up time	t_str	2.0 ms Max.		T=0 at 90% Vcc
Rise time / Fall time	t_r/ t_f	8.0 ns Max.		10 % V_{CC} to 90 % V_{CC} level, Load:15 pF
CMOS load condition	L_CMOS	15 pF		15 pF ±10 %

* Note : Please contact us for requirements not listed in this specification.

Product Name (Standard form): TG3225 CEN 39.000000MHz K F G N N M
① ② ③ ④ ⑤ ⑥ ⑦ ⑧ ⑨

①Model ②Output (C: CMOS)
③Frequency ④Supply voltage (Refer to symbol table)
⑤Frequency / temperature characteristics (F: ±2.0 × 10^{-6} Max.) ⑥Operating temperature (G: -40 °C to +85 °C)
⑦OE function (N: Non) ⑧Vc function(Refer to symbol table , A: Vc =any) ⑨Internal identification code ("M" is default)

④Supply voltage[Vcc] ,⑧Vc function[Vc] (Symbol table)

Voltage [V]	TCXO	VC-TCXO		
④Vcc (Typ.)	K: 2.5 to 3.3	K: 2.5 to 3.3	P: 2.6 to 3.3	M: 2.8 to 3.3
⑧Vc (Typ.)	N: Non	C: 1.4	D: 1.5	E: 1.65

External dimensions (Unit:mm)

TG3225CEN

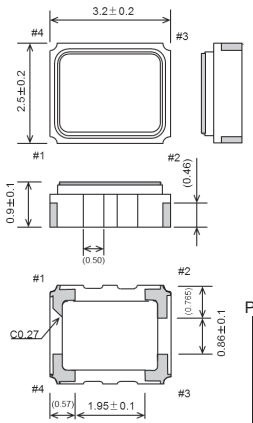

TG2520CEN

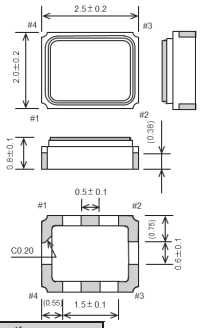

Pin map

Pin	Connection	
	VC-TCXO	TCXO
1	Vc	N.C.*1
2	GND	
3	OUT	
4	Vcc	

*1) Please keep "N.C." pin OPEN condition or GND connection. "N.C." pin doesn't work as a ground pin.

Footprint (Recommended) (Unit:mm)

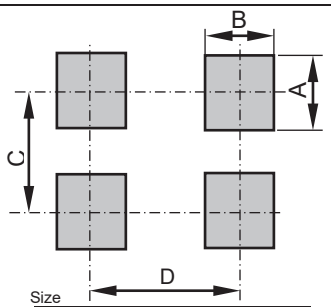

Size

	TG3225CEN (3.2x2.5mm)	TG2520CEN (2.5x2.0mm)
A	1.15	1.0
B	0.85	0.8
C	1.6	1.4
D	2.6	2.1

For stable operation, please add a bypass capacitor (0.01uF to 0.1uF) between Vcc and GND. Please place it as close to TCXO as possible.

TCXO HIGH STABILITY
105 ºC HIGH TEMPERATURE

TG7050CKN / TG7050SKN
TG7050CMN / TG7050SMN

Pb Free
RoHS Compliant

Product Number
TG7050CKN: X1G005661xxxx99
TG7050SKN: X1G005671xxxx99
TG7050CMN: X1G005681xxxx99
TG7050SMN: X1G005691xxxx99

- Frequency range : 10 MHz to 54 MHz
- Supply voltage : 3.3 V Typ.
- Frequency / temperature characteristics : ±0.1 × 10^{-6} Max. (-40 ºC to +105 ºC)
- Free-run accuracy : ±4.6× 10^{-6} Max. / 20years (for Stratum3)
- External dimensions : 7.0 × 5.0 × 1.5 mm (10 pins or 4 pins)
- Applications : Network synchronization, Stratum3, BTS, SyncE, IEEE1588, Microwave, BTS
- Features : 105 °C High temp, High stability

TG7050CKN
TG7050SKN
(10 pins)

TG7050CMN
TG7050SMN
(4 pins)

Specifications (characteristics)

Item	Symbol	CMOS	Clipped sine wave	Condition
Output frequency range	f_o	10 MHz to 54 MHz		Please contact us about available frequencies.
Supply voltage	V_{CC}	3.3 V ±5 %		
Storage temperature	T_stg	-40 °C to +105 °C		Storage as single product.
Operating temperature	T_use	-40 °C to +105 °C		
a) Frequency tolerance	f_tol	±1.0 × 10^{-6} Max.		After reflow, +25 °C
b) Frequency/temperature characteristics	f_o-T_C	±0.1 × 10^{-6} Max.		-40 °C to +105 °C
c) Frequency/load coefficient	f_o-Load	±0.1 × 10^{-6} Max.		Load ±10 %
d) Frequency/voltage coefficient	f_o-V_{CC}	±0.1 × 10^{-6} Max.		V_{CC} ± 5 %
e) Frequency aging	f_age	±0.5 × 10^{-6} Max.		+25 °C, First year
		±3.0 ×10^{-6} Max.		+25 °C, 20 years
Holdover stability (Constant temperature)	-	±0.01 × 10^{-6} Max. (+25 °C, 24 hours)		After 10 days of continuous operation
		±0.04 × 10^{-6} Max. (+25 °C, 24 hours)		After 48 hours of continuous operation
Wander generation (MTIE, TDEV)		Compliant with GR-1244CORE, ITU-T G.8262		
Free-run accuracy	-	±4.6 × 10^{-6} Max. / 20 years		This includes Item a), b), c), d) and e)
Current consumption	I_{CC}	7.0 mA Max.	6.0 mA Max.	10 MHz≦f0≦26 MHz
		9.0 mA Max.		26 MHz＜f0≦40 MHz
		10.0 mA Max.		40 MHz＜f0≦54 MHz
Symmetry	SYM	45 % to 55 %	-	GND level (DC cut)
Output voltage	V_{OH}	90 % Vcc Min.	-	
	V_{OL}	10 % Vcc Max.	-	
Rise time / Fall time	tr/tf	8.0 ns Max.	-	10 % V_{CC} to 90 % V_{CC} level, Load:15 pF
Start-up time	t_str	5 ms. Max.		t=0 at 90 % V_{CC}
Output level	V_{PP}	-	0.8 V Min.	Peak to Peak
Output load condition	Load	15 pF	10 kΩ//10 pF	
Input voltage	V_{IH}	70% V_{CC} Min.		OE terminal (Enable voltage)
	V_{IL}	30% V_{CC} Max.		OE terminal (Disable voltage)

* Note : Please contact us for requirements not listed in this specification.

Product Name TG7050 C K N 30.720000MHz C A H H G A
(Standard form) ① ②③ ④ ⑤ ⑥ ⑦ ⑧ ⑨ ⑩

①Model ②Output (C: CMOS, S: Clipped sine wave) ③Package type (K: 10 pins, M: 4 pins) ④Frequency ⑤Supply voltage (C: 3.3 V Typ.)
⑥Frequency/temperature characteristics (A: ±0.1 × 10^{-6} Max.) ⑦Operating temperature (H: -40 °C to +105 °C)
⑧OE function (H: Active High, N: Non) ⑨Vc function (G: Vc Non) ⑩Internal identification code (“A” is default)

External dimensions (Unit :mm)

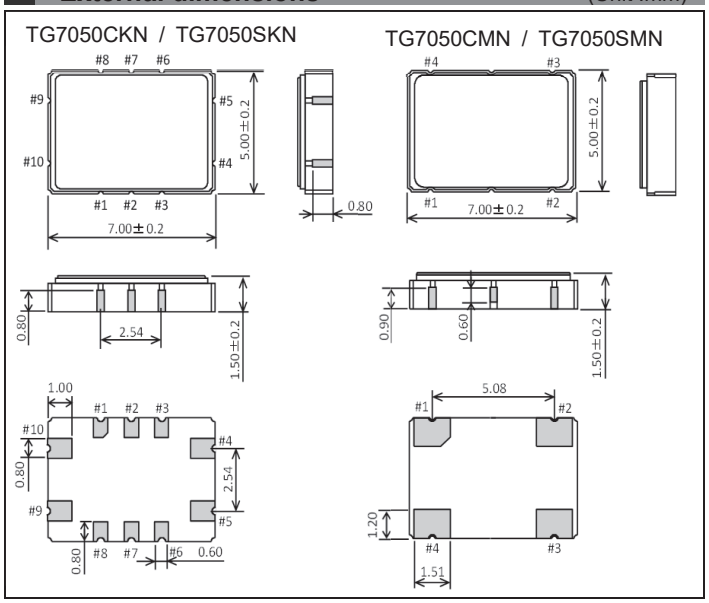

Footprint (Recommended) / Pin Map (Unit :mm)

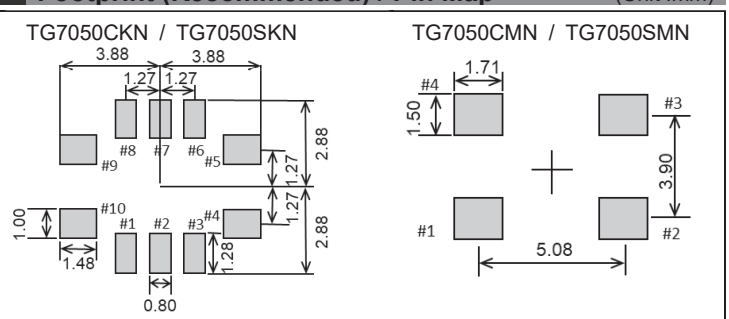

To maintain stable operation, provide a 0.01 µF to 0.1 µF by-pass capacitor at a location as near as possible to the power source terminal of the crystal product (between V_{CC} - GND).

Pin	Connection
1, 2, 3, 6, 7, 10	N.C.
4	GND
5	OUT
8	OE
9	V_{CC}

OE pin = "H" or "open": Specified frequency output.
OE pin = "L" : Output is high impedance.

Pin	Connection
1	N.C
2	GND
3	OUT
4	V_{CC}

TCXO HIGH STABILITY
105 ºC HIGH TEMPERATURE

Pb Free
RoHS Compliant

Product Number
TG-5510CA: X1G006001xxxx99
TG-5511CA: X1G006011xxxx99

TG-5510CA
TG-5511CA

- Frequency range : 10 MHz to 54 MHz
- Supply voltage : 3.3 V Typ.
- Frequency / temperature characteristics : ±0.28 × 10^{-6} Max. (-40 ºC to +85 ºC, 105 °C option)
- Free-run accuracy : ±4.6× 10^{-6} Max. / 20 years (for Stratum3)
- External dimensions : 7.0 × 5.0 × 1.5 mm (10 pins or 4 pins)
- Applications : Network synchronization, Stratum3, BTS, SyncE, IEEE1588, Microwave, BTS
- Features : 105 °C High temp, High stability

TG-5510CA
(10 pins)

TG-5511CA
(4 pins)

Specifications (characteristics)

Item	Symbol	CMOS	Clipped sine wave	Condition
Output frequency range	f_o	10 MHz to 54 MHz		Please contact us about available frequencies.
Supply voltage	V_{CC}	3.3 V ±5 %		
Storage temperature	T_stg	-40 °C to +105 °C		Storage as single product.
Operating temperature	T_use	-40 °C to +85 °C (-40 °C to +105 °C)		Standard (Option)
a) Frequency tolerance	f_tol	±1.0 × 10^{-6} Max.		After reflow, +25 °C
b) Frequency/temperature characteristics	f_o-T_C	±0.28 × 10^{-6} Max. (±0.25 × 10^{-6} Max.)		Standard (Option)
c) Frequency/load coefficient	f_o-Load	±0.1 × 10^{-6} Max.		Load ±10 %
d) Frequency/voltage coefficient	f_o-V_{CC}	±0.1 × 10^{-6} Max.		V_{CC} ± 5 %
e) Frequency aging	f_age	±0.5 × 10^{-6} Max.		+25 °C, First year
		±3.0 ×10^{-6} Max.		+25 °C, 20 years
Holdover stability (Constant temperature)	-	±0.01 × 10^{-6} Max. (+25 °C, 24 hours)		After 10 days of continuous operation
		±0.04 × 10^{-6} Max. (+25 °C, 24 hours)		After 48 hours of continuous operation
Wander generation (MTIE, TDEV)		Compliant with GR-1244CORE, ITU-T G.8262		
Free-run accuracy	-	±4.6 × 10^{-6} Max. / 20 years		This includes Item a), b), c), d) and e)
Current consumption	I_{CC}	7.0 mA Max.	6.0 mA Max.	10 MHz≦f0≦26 MHz
		9.0 mA Max.		26 MHz＜f0≦40 MHz
		10.0 mA Max.		40 MHz＜f0≦54 MHz
Symmetry	SYM	45 % to 55 %	-	GND level (DC cut)
Output voltage	V_{OH}	90 % Vcc Min.	-	
	V_{OL}	10 % Vcc Max.	-	
Rise time / Fall time	tr/tf	8.0 ns Max.	-	10 % V_{CC} to 90 % V_{CC} level, Load:15 pF
Start-up time	t_str	5 ms. Max.		t=0 at 90 % V_{CC}
Output level	V_{PP}	-	0.8 V Min.	Peak to Peak
Output load condition	Load	15 pF	10 kΩ//10 pF	
Input voltage	V_{IH}	70% V_{CC} Min.		OE terminal (Enable voltage)
	V_{IL}	30% V_{CC} Max.		OE terminal (Disable voltage)

* Note : Please contact us for requirements not listed in this specification.

Product Name (Standard form) TG-5510CA-*** 30.720000MHz
① ② ③ ④
①Model ②Package type ③Spec segment(Please contact us) ④Frequency

External dimensions (Unit :mm)

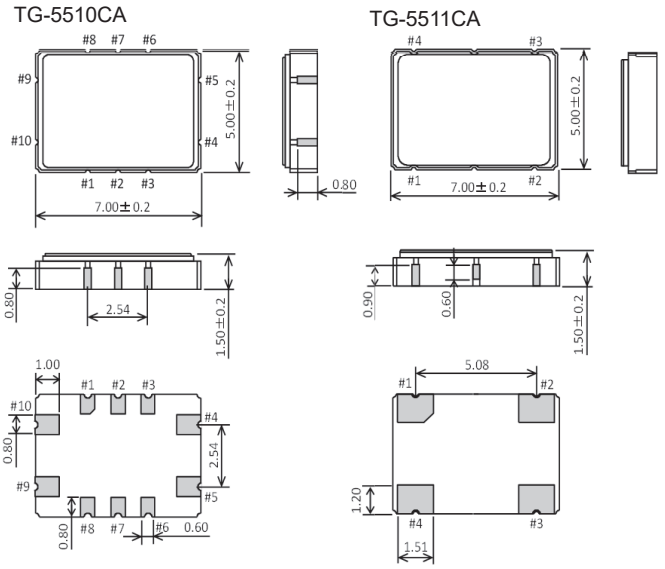

Footprint (Recommended) / Pin Map (Unit :mm)

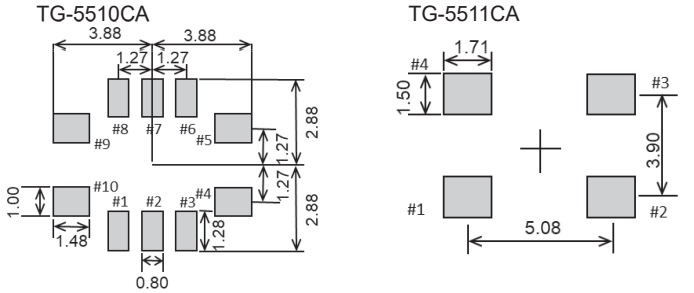

To maintain stable operation, provide a 0.01 μF to 0.1 μF by-pass capacitor at a location as near as possible to the power source terminal of the crystal product (between V_{CC} - GND).

Pin	Connection
1, 2, 3, 6, 7, 10	N.C.
4	GND
5	OUT
8	OE
9	V_{CC}

Pin	Connection
1	N.C
2	GND
3	OUT
4	V_{CC}

OE pin = "H" or "open": Specified frequency output.
OE pin = "L" : Output is high impedance.

TCXO HIGH STABILITY
105 ºC HIGH TEMPERATURE

Pb Free
RoHS Compliant

Product Number
TG-5510CB: X1G006061xxxx14
TG-5511CB: X1G006071xxxx14

TG-5510CB
TG-5511CB

- Frequency range : 10 MHz to 54 MHz
- Supply voltage : 3.3 V Typ.
- Frequency / temperature characteristics : ±0.28 × 10^{-6} Max. (-40 ºC to +85 ºC, 105 °C option)
- Free-run accuracy : ±4.6× 10^{-6} Max. / 20 years (for Stratum3)
- External dimensions : 5.0 × 3.2 × 1.45 mm (10 pins or 4 pins)
- Applications : Network synchronization, Stratum3, BTS, SyncE, IEEE1588, Microwave, BTS
- Features : 105 °C High temp, High stability

TG-5510CB
(10 pins)

TG-5511CB
(4 pins)

Specifications (characteristics)

Item	Symbol	CMOS	Clipped sine wave	Condition
Output frequency range	f_o	10 MHz to 54 MHz		Please contact us about available frequencies.
Supply voltage	V_{CC}	3.3 V ±5 %		
Storage temperature	T_stg	-40 °C to +105 °C		Storage as single product.
Operating temperature	T_use	-40 °C to +85 °C (-40 °C to +105 °C)		Standard (Option)
a) Frequency tolerance	f_tol	±1.0 × 10^{-6} Max.		After reflow, +25 °C
b) Frequency/temperature characteristics	f_o-T_C	±0.28 × 10^{-6} Max. (±0.25 × 10^{-6} Max.)		Standard (Option)
c) Frequency/load coefficient	f_o-Load	±0.1 × 10^{-6} Max.		Load ±10 %
d) Frequency/voltage coefficient	f_o-V_{CC}	±0.1 × 10^{-6} Max.		V_{CC} ± 5 %
e) Frequency aging	f_age	±0.5 × 10^{-6} Max.		+25 °C, First year
		±3.0 ×10^{-6} Max.		+25 °C, 20 years
Holdover stability (Constant temperature)	-	±0.01 × 10^{-6} Max. (+25 °C, 24 hours)		After 10 days of continuous operation
		±0.04 × 10^{-6} Max. (+25 °C, 24 hours)		After 48 hours of continuous operation
Wander generation (MTIE, TDEV)		Compliant with GR-1244CORE, ITU-T G.8262		
Free-run accuracy	-	±4.6 × 10^{-6} Max. / 20 years		This includes Item a), b), c), d) and e)
Current consumption	I_{CC}	7.0 mA Max.	6.0 mA Max.	10 MHz≦f0≦26 MHz
		9.0 mA Max.		26 MHz＜f0≦40 MHz
		10.0 mA Max.		40 MHz＜f0≦54 MHz
Symmetry	SYM	45 % to 55 %	-	GND level (DC cut)
Output voltage	V_{OH}	90 % Vcc Min.	-	
	V_{OL}	10 % Vcc Max.	-	
Rise time / Fall time	tr/tf	8.0 ns Max.	-	10 % V_{CC} to 90 % V_{CC} level, Load:15 pF
Start-up time	t_str	5 ms. Max.		t=0 at 90 % V_{CC}
Output level	V_{PP}	-	0.8 V Min.	Peak to Peak
Output load condition	Load	15 pF	10 kΩ//10 pF	
Input voltage	V_{IH}	70% V_{CC} Min.		OE terminal (Enable voltage)
	V_{IL}	30% V_{CC} Max.		OE terminal (Disable voltage)

* Note : Please contact us for requirements not listed in this specification.

Product Name TG-5510CB-*** 38.880000MHz
(Standard form) ① ② ③ ④
_①Model ②Package type ③Spec segment(Please contact us) ④Frequency

External dimensions (Unit :mm)

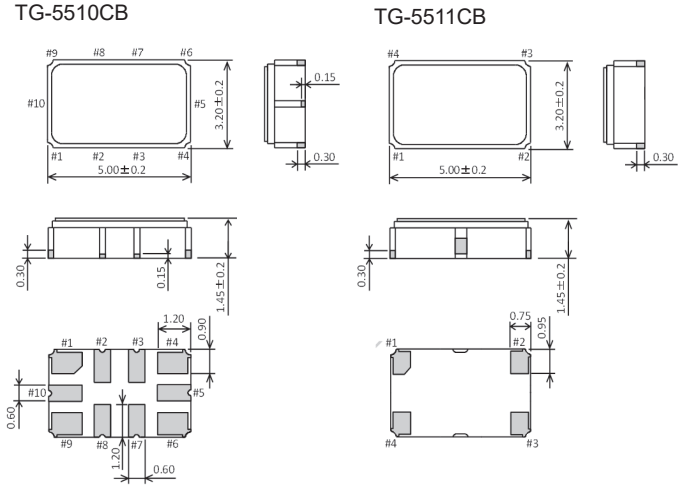

Footprint (Recommended) / Pin Map (Unit :mm)

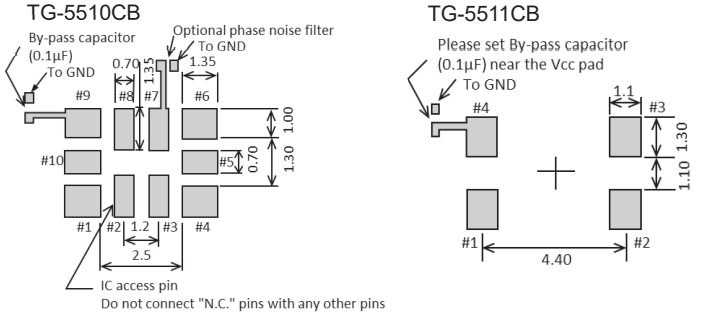

To maintain stable operation, provide a 0.01 μF to 0.1 μF by-pass capacitor at a location as near as possible to the power source terminal of the crystal product (between V_{CC} - GND).

Pin	Connection
1, 2, 5, 8, 10	N.C.
3	OE
4	GND
6	OUT
7	N.C. or Filter
9	V_{CC}

Pin	Connection
1	N.C
2	GND
3	OUT
4	V_{CC}

OE pin = "H" or "open": Specified frequency output.
OE pin = "L" : Output is high impedance.

TCXO HIGH STABILITY
+105 ºC HIGH TEMPERATURE

Pb Free
RoHS Compliant

Product Number
TG5032CKN: X1G006021xxxx14
TG5032SKN: X1G006031xxxx14
TG5032CMN: X1G006041xxxx14
TG5032SMN: X1G006051xxxx14

TG5032CKN / TG5032SKN
TG5032CMN / TG5032SMN

- Frequency range : 10 MHz to 54 MHz
- Supply voltage : 3.3 V Typ.
- Frequency / temperature characteristics : ±0.1 × 10^{-6} Max. (-40 ºC to +105 ºC)
- Holdover stability : ±4.6× 10^{-6} Max. / 20 years (for Stratum3)
- External dimensions : 5.0 × 3.2 × 1.45 mm (10 pins or 4 pins)
- Applications : Network synchronization, Stratum3, BTS, SyncE, IEEE1588, Microwave
- Features : +105 °C High temp, High stability

TG5032CKN
TG5032SKN
(10 pins)

TG5032CMN
TG5032SMN
(4 pins)

Specifications (characteristics)

Item	Symbol	CMOS	Clipped sine wave	Condition
Output frequency range	Fo	10 MHz to 54 MHz		Please contact us about available frequencies.
Supply voltage	V_{CC}	3.3 V ± 5 %		
Storage temperature	T_stg	-40 °C to +105 °C		Storage as single product.
Operating temperature	T_use	-40 °C to +105 °C		
a) Frequency tolerance	f_tol	±1.0 × 10^{-6} Max.		After reflow, +25 °C
b) Frequency/temperature characteristics	fo-T_C	±0.1 × 10^{-6} Max.		-40 °C to +105 °C
c) Frequency/load coefficient	fo-Load	±0.1 × 10^{-6} Max.		Load ±10 %
d) Frequency/voltage coefficient	fo-V_{CC}	±0.1 × 10^{-6} Max.		V_{CC} ± 5 %
e) Frequency aging	f_age	±0.5 × 10^{-6} Max.		+25 °C, First year
		±3.0 ×10^{-6} Max.		+25 °C, 20 years
Wander generation (MTIE, TDEV)		Compliant with GR-1244CORE, ITU-T G.8262.1, G.8273.2		
Holdover stability (Free-run accuracy)	f_hos	±4.6 × 10^{-6} Max. / 20 years		This includes Item a), b), c), d) and e)
Current consumption	I_{CC}	7.0 mA Max.	6.0 mA Max.	10 MHz ≦ fo ≦ 26 MHz
		9.0 mA Max.		26 MHz ＜ fo ≦ 40 MHz
		10.0 mA Max.		40 MHz ＜ fo ≦ 54 MHz
Symmetry	SYM	45 % to 55 %	-	GND level (DC cut)
Output voltage	V_{OH}	90 % Vcc Min.	-	
	V_{OL}	10 % Vcc Max.	-	
	Vpp	-	0.8 V Min.	Peak to Peak
Rise time / Fall time	tr/tf	8.0 ns Max.	-	10 % V_{CC} to 90 % V_{CC} level, Load:15 pF
Start-up time	t_str	5 ms. Max.		t=0 at 90 % V_{CC}
Output load condition	Load	15 pF	10 kΩ//10 pF	
Input voltage	V_{IH}	70% V_{CC} Min.		OE terminal (Enable voltage)
	V_{IL}	30% V_{CC} Max.		OE terminal (Disable voltage)

* Note : Please contact us for requirements not listed in this specification.

Product Name (Standard form): TG5032 C K N 38.880000MHz C A H H G A
① ②③ ④ ⑤ ⑥ ⑦ ⑧ ⑨ ⑩

①Model ②Output (C: CMOS, S: Clipped sine wave) ③Package type (K: 10 pins, M: 4 pins) ④Frequency ⑤Supply voltage (C: 3.3 V Typ.)
⑥Frequency/temperature characteristics (A: ±0.1 × 10^{-6} Max.) ⑦Operating temperature (H: -40 °C to +105 °C)
⑧OE function (H: Active High, N: Non) ⑨Filter function (G: Filter-ON, N: NO-Filter) ⑩Internal identification code ("A" is default)

External dimensions (Unit :mm)

TG5032CKN / TG5032SKN

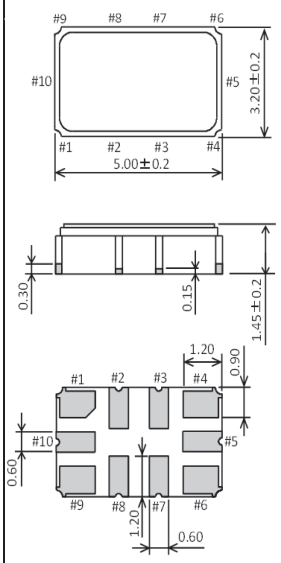

TG5032CMN / TG5032SMN

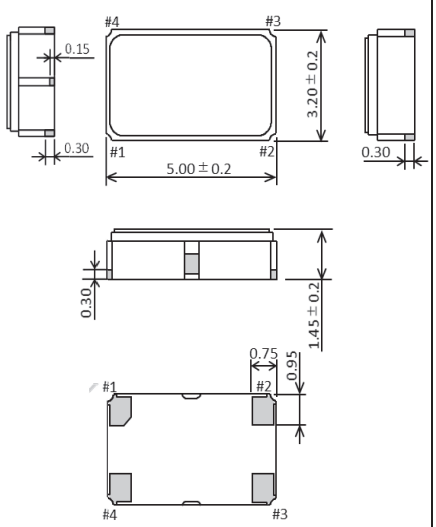

Footprint (Recommended) / Pin Map (Unit :mm)

TG5032CKN / TG5032SKN

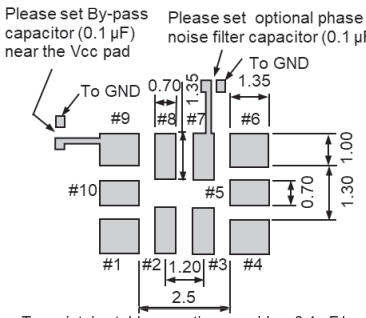

TG5032CMN / TG5032SMN

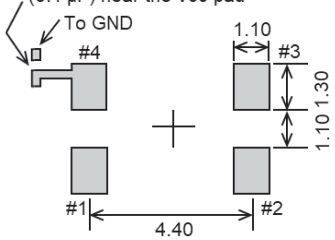

To maintain stable operation, provide a 0.1 μF by-pass capacitor at a location as near as possible to the power source terminal of the crystal product (between V_{CC} - GND).

Pin	Connection
1, 2, 5, 8, 10	N.C.
3	OE
4	GND
6	OUT
7	N.C. or Filter
9	V_{CC}

Pin	Connection
1	N.C.
2	GND
3	OUT
4	V_{CC}

OE pin = "H" or "open": Specified frequency output.
OE pin = "L" : Output is high impedance.

VC-TCXO / TCXO
ULTRA HIGH STABILITY

Pb Free
RoHS Compliant

Product Number
TG5032CFN :X1G005391xxxxxx
TG5032SFN :X1G005401xxxxxx

TG5032CFN
TG5032SFN

- •Frequency range : 10 MHz to 40 MHz
- •Supply voltage : 3.3 V Typ.
- •Frequency / temperature characteristics : ±0.1×10^{-6} Max. (-40 ºC to +85 ºC)
- •Frequency aging : ±3.0×10^{-6} Max./20years
- •External dimensions: 5.0 × 3.2 × 1.45 mm (4 pins)
- •Applications : Small Cells, Stratum3, SyncE, IEEE1588
- •Features : Ultra high stability, Wide temperature range

Specifications (characteristics)

Item	Symbol	TG5032CFN (CMOS output)		TG5032SFN(Clipped sine wave)		Conditions / Remarks
		VC-TCXO	TCXO	VC-TCXO	TCXO	
Output frequency range	f0	10 MHz to 40 MHz				
		10, 12.8, 19.2, 20, 24.576, 25, 25.6, 26, 30.72, 38.4, 38.88, 40 MHz				Standard frequency
Supply voltage	V_{CC}	C: 3.3 V ±5% (Supply voltage range :2.375 V to 3.63 V)				
Storage temperature	T_stg	-40 ºC to +90 ºC				Storage as single product
Operating temperature	T_use	G: -40 ºC to +85 ºC				Standard temp. range
a) Frequency tolerance	f_tol	±1.0 × 10^{-6}Max.				After reflow, +25 ºC
b) Frequency/temperature Characteristics	f0-Tc	A: ±0.1 × 10^{-6} Max. / G: -40 ºC to +85 ºC H: ±0.25 × 10^{-6} Max. / G: -40 ºC to +85 ºC B: ±0.28 × 10^{-6} Max. / G: -40 ºC to +85 ºC				Reference to (fmax+fmin)/2
c) Frequency/load coefficient	f0-Load	±0.1 ×10^{-6} Max.				Load ±10 %
d) Frequency/voltage coefficient	f0-Vcc	±0.1 ×10^{-6} Max.				Vcc ±5%
e) Frequency aging	f_age	±0.5 ×10^{-6} Max.				+25 °C, First year
		±3.0 ×10^{-6} Max.				+25 °C, 20 years
Holdover stability (Constant temperature)	-	±0.01 × 10^{-6} Max.(+25 °C , 24 hours)				After 10 days of continuous operation.
		±0.04 × 10^{-6} Max.(+25 °C , 24 hours)				After 48 hours of continuous operation.
Wander generation (MTIE, TDEV)	-	—				Compliant with GR-1244CORE , ITU-T G.8262
Free-run accuracy	-	±4.6 × 10^{-6} Max.				This includes Item a),b),c),d)and e)
Current consumption	Icc	5.0 mA Max.		5.0 mA Max.		10 MHz≦f0≦26 MHz
		6.0 mA Max.				26 MHz＜f0≦40 MHz
Input resistance	Rin	100 kΩ Min.	—	100 kΩ Min.	—	Vc- GND (DC)
Frequency control range	f_cont	±5 ×10^{-6} to ±10 ×10^{-6}	—	±5 ×10^{-6} to ±10 ×10^{-6}	—	D :Vc=1.5 V ± 1.0 V at V_{CC}=3.3 V E: Vc=1.65 V ± 1.0 V at V_{CC}=3.3 V
Frequency change polarity	—	Positive polarity	—	Positive polarity	—	
Symmetry	SYM	45 % to 55 %		—		50 % Vcc level, L_CMOS ≦ 15 pF
Output voltage	VOH	90 % Vcc Min.		—		
	VOL	10 % Vcc Max.		—		
Output level	VPP	—		0.8 V Min.		Peak to Peak
Rise time / Fall time	tr/ tf	8.0 ns Max.		—		10 % Vcc to 90 % Vcc level, Load:15 pF
Start-up time	t_str	5.0 ms Max.				T=0 at 90% Vcc
Output load condition	Load	15 pF		10 kΩ//10 pF		

* Note : Please contact us for requirements not listed in this specification.

Product Name (Standard form) TG5032 C FN 30.720000MHz C A G N D A
① ② ③ ④ ⑤ ⑥ ⑦ ⑧ ⑨

①Model ②Output (C: CMOS, S: Clipped sine wave) ③Frequency ④Supply voltage (C: 3.3 V Typ.)
⑤Frequency / temperature characteristics (A: ±0.1 × 10^{-6} Max., H: ±0.25 × 10^{-6} Max., B: ±0.28 × 10^{-6} Max.)
⑥Operating temperature (G: -40 °C to +85 °C) ⑦OE function (N: Non)
⑧Vc function (A: Vc =any, D: Vc =1.5 V, E: Vc =1.65 V, N: Non) ⑨Internal identification code ("A" is default)

External dimensions (Unit :mm)

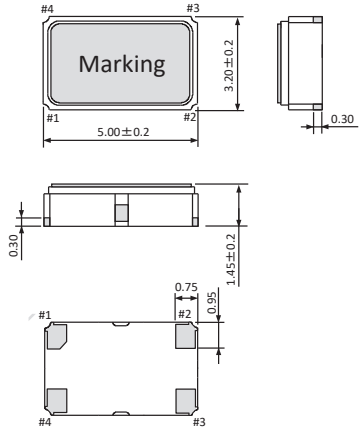

Pin map

Pin	Connection VC-TCXO	Connection TCXO
1	Vc	N.C
2	GND	
3	OUT	
4	Vcc	

Footprint (Recommended) (Unit :mm)

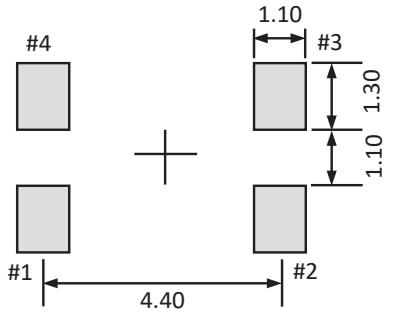

To maintain stable operation, provide a 0.1 μF by-pass capacitor at a location as near as possible to the power source terminal of the crystal product (between V_{CC} - GND).

VC-TCXO / TCXO
ULTRA HIGH STABILITY

Pb Free
RoHS Compliant

Product Number
TG5032CGN : X1G005231xxxxxx
TG5032SGN : X1G005241xxxxxx

TG5032CGN
TG5032SGN

- •Frequency range : 10 MHz to 40 MHz
- •Supply voltage : 3.3 V Typ.
- •Frequency / temperature characteristics : ±0.1×10^{-6} Max. (-40 ºC to +85 ºC)
- •Frequency aging : ±3.0×10^{-6} Max./20years
- •External dimensions : 5.0 × 3.2 × 1.45 mm (10 pins)
- •Applications : Small Cells, Stratum3, SyncE, IEEE1588
- •Features : Ultra high stability, Wide temperature range

Specifications (characteristics)

Item	Symbol	TG5032CGN (CMOS)		TG5032SGN(Clipped sine wave)		Conditions / Remarks
		VC-TCXO	TCXO	VC-TCXO	TCXO	
Output frequency range	f_0	10 MHz to 40 MHz				
		10,12.8, 19.2, 20, 24.576, 25, 25.6, 26, 30.72, 38.4, 38.88, 40 MHz				Standard frequency
Supply voltage	V_{CC}	C: 3.3 V ±5% (Supply voltage range :2.375 V to 3.63 V)				
Storage temperature	T_stg	-40 ºC to +90 ºC				Storage as single product
Operating temperature	T_use	G: -40 ºC to +85 ºC				
a) Frequency tolerance	f_tol	±1.0 × 10^{-6}Max.				After reflow, +25 ºC
b) Frequency/temperature Characteristics	f_0-Tc	A: ±0.1 × 10^{-6} Max. / G: -40 ºC to +85 ºC H: ±0.25 × 10^{-6} Max. / G: -40 ºC to +85 ºC B: ±0.28 × 10^{-6} Max. / G: -40 ºC to +85 ºC				Reference to (fmax+fmin)/2
c) Frequency/load coefficient	f_0-Load	±0.1 ×10^{-6} Max.				Load ±10 %
d) Frequency/voltage coefficient	f_0-V_{CC}	±0.1 ×10^{-6} Max.				V_{CC} ±5%
e) Frequency aging	f_age	±0.5 ×10^{-6} Max.				+25 °C, First year
		±3.0 ×10^{-6} Max.				+25 °C, 20 years
Holdover stability (Constant temperature)	-	±0.01 × 10^{-6} Max.(+25 °C , 24 hours)				After 10 days of continuous operation.
		±0.04 × 10^{-6} Max.(+25 °C , 24 hours)				After 48 hours of continuous operation.
Wander generation (MTIE, TDEV)	-	—				Compliant with GR-1244CORE , ITU-T G.8262
Free-run accuracy	-	±4.6 × 10^{-6} Max.				This includes Item a),b),c),d)and e)
Current consumption	I_{CC}	5.0 mA Max.		5.0 mA Max.		10 MHz≦f_0≦26 MHz
		6.0 mA Max.				26 MHz＜f_0≦40 MHz
Input resistance	Rin	100 kΩ Min.	—	100 kΩ Min.	—	V_C- GND (DC)
Frequency control range	f_cont	±5 ×10^{-6} to ±10 ×10^{-6}	—	±5 ×10^{-6} to ±10 ×10^{-6}	—	D, J :V_C=1.5 V ± 1.0 V at V_{CC}=3.3 V E, K: V_C=1.65 V ± 1.0 V at V_{CC}=3.3 V
Frequency change polarity	—	Positive polarity	—	Positive polarity	—	
Symmetry	SYM	45 % to 55 %		—		50 % V_{CC} level, L_CMOS ≦ 15 pF
Output voltage	V_{OH}	90 % V_{CC} Min.		—		
	V_{OL}	10 % V_{CC} Max.		—		
Output level	V_{PP}	—		0.8 V Min.		Peak to Peak
Rise time / Fall time	t_r/ t_f	8.0 ns Max.		—		10 % V_{CC} to 90 % V_{CC} level, Load:15 pF
Start-up time	t_str	5.0 ms Max.(Non-Filter: Standard) / 2.0 sec. Max.(Filter: Option)				T=0 at 90% Vcc
Output load condition	Load	15 pF		10 kΩ//10 pF		
Input voltage	V_{IH}	70% V_{CC} Min.				OE terminal(Enable voltage)
	V_{IL}	30% V_{CC} Max.				OE terminal(Disable voltage)

* Note : Please contact us for requirements not listed in this specification.

Product Name (Standard form): TG5032 C GN 30.720000MHz C A G H D A
① ② ③ ④ ⑤ ⑥ ⑦ ⑧ ⑨

①Model ②Output (C: CMOS, S: Clipped sine wave)
③Frequency ④Supply voltage (C: 3.3 V Typ)
⑤Frequency/temperature characteristics (A: ±0.1 × 10^{-6} Max., H: ±0.25 × 10^{-6} Max., B: ±0.28 × 10^{-6} Max.)
⑥Operating temperature (G: -40 °C to +85 °C) ⑦OE function (H: Active High)
⑧Vc function (Refer to symbol table) ⑨Internal identification code ("A" is default)

⑧Vc function (symbol table)

Vc [V]	Non	1.5	1.65	Any
Non Filter	N	D	E	A
Filter ON	G	J	K	F

External dimensions (Unit :mm)

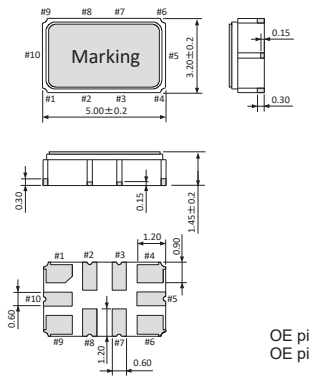

Pin map

Pin	Connection	
	VC-TCXO	TCXO
1	Vc	N.C.
2	N.C.	
3	OE	
4	GND	
5	N.C.	
6	OUT	
7	N.C. or Filter	
8	N.C.	
9	Vcc	
10	N.C.	

OE pin = "H" or "open": Specified frequency output.
OE pin = "L" : Output is high impedance.

Footprint (Recommended) (Unit :mm)

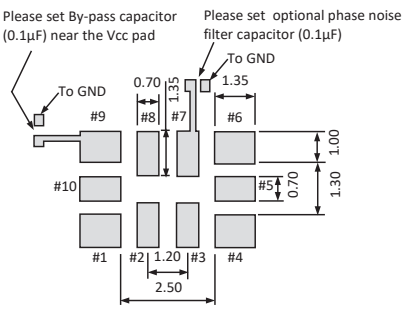

To maintain stable operation, provide a 0.1 μF by-pass capacitor at a location as near as possible to the power source terminal of the crystal product (between V_{CC} - GND).

VCXO / VCSO

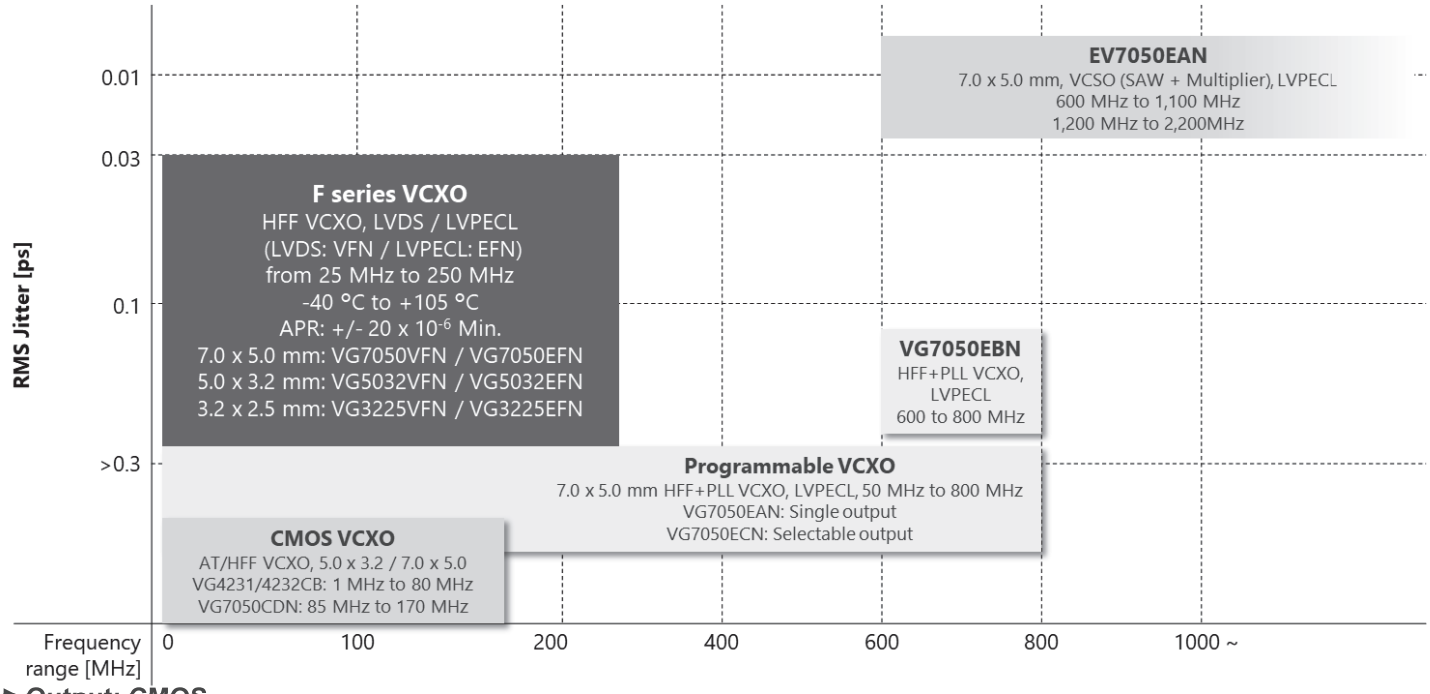

►Output: CMOS

P	Model	Size [mm]	Nominal frequency range	Frequency tolerance (× 10^{-6})	Operating temperature [°C]	Absolute pull range (× 10^{-6})	Supply voltage [V]	Current consumption Max. [mA]	Output Load condition [pF]	Output control
88	**VG7050CDN**	7.0×5.0×1.6t	85 MHz 170MHz	±50	-40 to +85 -40 to +105	±50	3.3±0.165	30	15	OE

►Output: LV-PECL

P	Model	Size [mm]	Nominal frequency range	Frequency tolerance (× 10^{-6})	Operating temperature [°C]	Absolute pull range (× 10^{-6})	Supply voltage [V]	Current consumption Max. [mA]	Output Load condition [pF]	Output control
90	**VG3225EFN** **VG5032EFN** **VG7050EFN**	3.2×2.5×1.05t 5.0×3.2×1.3t 7.0x5.0x1.5t	25 MHz 250MHz	±50	-40 to +85 -40 to +105	±50 ~170 MHz ±20 ~250 MHz ±50 ~170 MHz ±20 ~250 MHz	3.3±0.165	60	50	OE
91	**VG7050EBN**	7.0×5.0×1.5t	600 MHz 800 MHz	±50	-40 to +85	±50 ±100	3.3±0.33 2.5 ±0.125 3.3±0.33 2.5±0.125	90	50	OE
92 to 93	**EV7050EAN**	7.0×5.0×1.6t	600MHz 1100MHz 1200MHz 2200MHz	±100 ±120	-10 to +85 -40 to +85	±50 ±30	3.3 ±0.165	115 175	50	OE
94 to 95	**VG7050EAN** **(Programmable 1 setup Freq.)**	7.0×5.0×1.5t	50 MHz 800 MHz	±50	-40 to +85	0 to ±180	3.3 ±0.165 2.5 ±0.125	90	50	OE/ST (Active High or Low)
	VG7050ECN **(Programmable 4 setup Freq.)**	7.0×5.0×1.5t	50 MHz 800 MHz	±50	-40 to +85	0 to ±180	3.3±0.165 2.5 ±0.125	90	50	OE (Active High or Low)

►Output: LVDS

P	Model	Size [mm]	Nominal frequency range	Frequency tolerance (× 10^{-6})	Operating temperature [°C]	Absolute pull range (× 10^{-6})	Supply voltage [V]	Current consumption Max. [mA]	Output Load condition [pF]	Output control
90	**VG3225VFN** **VG5032VFN** **VG7050VFN**	3.2×2.5×1.05t 5.0×3.2×1.3t 7.0x5.0x1.5t	25 MHz 250MHz	±50	-40 to +85 -40 to +105	±50 ~170MHz ±20 ~250MHz ±50 ~170MHz ±20 ~250MHz	3.3 ±0.165	25	100	OE

VOLTAGE -CONTROLLED CRYSTAL OSCILLATOR (VCXO)

Pb Free
RoHS Compliant

Product Number
X1G004861xxxx00

VG7050CDN

- Frequency range : 85 MHz to 170 MHz
- Supply voltage : 3.3 V
- Absolute pull range : $\pm 50 \times 10^{-6}$ min.
- External dimensions : 7.0 × 5.0 × 1.5 mm (t:Typ.)
- Operation temperature : +85 °C / +105 °C
- Function : Output enable(OE)
- Output : CMOS

Specifications (characteristics)

Item	Symbol	Specifications	Remarks
Output frequency range	fo	85 MHz to 170 MHz	Please contact us for inquiries regarding available frequencies.
Supply voltage	Vcc	3.3 V ±0.165 V	
Storage temperature range	T_stg	-55 °C to +125 °C	Store as bare product after unpacking
Operating temperature range	T_use	G: -40 °C to +85 °C, H: -40 °C to +105 °C	
Frequency tolerance	f_tol	$\pm 50 \times 10^{-6}$ Max.	Includes initial tolerance, temperature change, Vcc change and 10years aging at +25°C. At Vc=1.65V, reference to f0
Current consumption	Icc	30 mA Max.	CL=15 pF
Absolute pull range*1	APR	$\pm 50 \times 10^{-6}$ Min.	Vc= 1.65 V ± 1.65 V
Input resistance	Rin	10 MΩ Min.	DC level
Frequency change polarity	—	Positive slope	Vc= 0 to 3.3 V
Symmetry	SYM	45 % to 55 %	50 % Vcc level
High output voltage	VOH	Vcc – 0.4 V Min.	
Low output voltage	VOL	0.4 V Max.	
Output load condition (CMOS)	L_CMOS	15 pF Max.	
Output enable / disable input voltage	VIH	70 % Vcc Min.	VIH or OPEN : Enable
	VIL	30 % Vcc Max.	VIL or GND : Disable
Rise time / Fall time	tr / tf	2 ns Max.	20 % Vcc to 80 % Vcc level
Start-up time	t_str	10 ms Max.	Time at minimum supply voltage to be 0 s

*1 Absolute pull range = Frequency control range - Frequency tolerance
* Please keep Vc pin open or ground while powering up Vcc.

Product name (Standard form)
VG7050 CDN 122.880000 MHz C J G H B A
① ② ③ ④ ⑤ ⑥ ⑦ ⑧ ⑨
① Model ②Output (C: CMOS) ③Frequency ④Supply voltage (C: 3.3 V Typ)
⑤Frequency tolerance (J: ±50 × 10^{-6} Max.) ⑥Operating temperature (G: -40 to +85°C, H: -40 to +105°C)
⑦OE Function (H: Active High) ⑧Absolute Pull Range (B: ±50 × 10^{-6} Min.) ⑨Output Standby Type (A: High-Z)

External dimensions (Unit :mm)

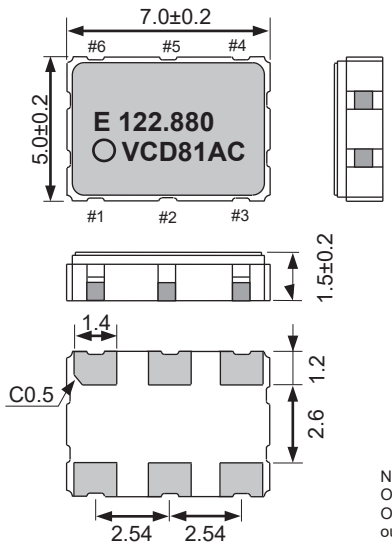

Pin map

Pin	Connection
1	Vc
2	OE
3	GND
4	OUT
5	N.C.
6	Vcc

Note.
OE Pin
OE pin = "H" or "open" : Specified frequency output.

Footprint (Recommended) (Unit :mm)

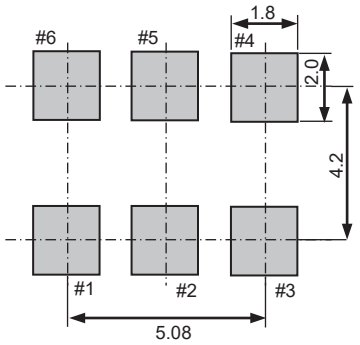

In order to achieve optimum jitter performance, it is recommended that the capacitor (0.1 μF + 10 μF) between VCC and GND pin should be placed as close to the VCC pin as possible.

VOLTAGE –CONTROLLED CRYSTAL OSCILLATOR (VCXO)

OUTPUT : CMOS

Pb Free
RoHS Compliant

Product Number
Q3614CE00xxxx00

VG-4231CE

- •Frequency range : 3 MHz to 50 MHz *
  * 50MHz is not included in Output frequency range.
- •Supply voltage : 3.3 V (PSCM / CSCM)
  : 2.8 V (PSBM / CSBM)
  : 1.8 V (PQEM / CQEM)
- •Frequency control range : ±140 × 10^{-6} (*SCM / *SBM)
  : ±120 × 10^{-6} (*QEM)
- •Low current consumption : 1.0 mA Typ. (27 MHz , 3.3 V)
- •External dimensions : 3.2 × 2.5 × 1.05 mm

Specifications (characteristics)

Item	Symbol	Specifications			Conditions / Remarks
		PSCM / CSCM	PSBM / CSBM	PQEM / CQEM	
Output frequency range	Fo	3 MHz to 50 MHz *		24 MHz to 30 MHz	Please contact us about available frequencies. 50MHz is not included in Output frequency range.
Supply voltage	Vcc	3.3 V ± 0.3 V	2.8 V ± 0.2 V	1.8 V ± 0.2 V	
Storage temperature	T_stg	-40 °C to +125 °C			Storage as single product.
Operating temperature	T_use	As per below table			
Frequency tolerance	f_tol	As per below table			C : Vc=1.65 V / B : Vc=1.40 V / E : Vc=0.90 V
Current consumption	Icc	7 mA Max.	6.8 mA Max.	1.2 mA Max.	No load condition
Frequency control range	f_cont	S:± 140 × 10^{-6} Min.		Q:± 120 × 10^{-6} Min.	Vc = 1/2 Vcc ± 1/2 Vcc
Modulation characteristics	BW	15 kHz Min.			± 3 dB (at 1 kHz)
Input resistance	Rin	M : 5 MΩ Min.			DC level
Frequency change polarity	—	Positive polarity			Vc=0 V to Vcc
Symmetry	SYM	40 % to 60 %			CMOS load:50 % Vcc level
Output voltage	VOH	Vcc-0.4 V Min.			IOH=-3.0 mA
	VOL	0.4 V Max.			IOL= 3.0 mA
Output load condition (CMOS)	L_CMOS	15 pF Max.			CMOS load
Rise time and Fall time	tr / tf	4 ns Max.		6 ns Max.	CMOS load: 20 % Vcc to 80 % Vcc level
Start-up time	t_str	5 ms Max.			Time at 90 % Vcc to be 0 s
Frequency aging	f_age	± 5 × 10^{-6} Max.			+25 °C, 5 years

Please keep Vc pin open or ground while powering up Vcc.
50MHz is not included in Output frequency range.

Product Name (Standard form) VG-4231 CE 27.000000MHz C S C - M (⑤⑥:SE,QC,QB are not available)
① ② ③ ④⑤⑥ ⑦
①Model ②Package type ③Frequency ④Frequency tolerance / Operating temperature
⑤Frequency control range ⑥Supply voltage ⑦Input resistance (M: 5 MΩ Min.)

④⑤	④Frequency tolerance / Operating temperature		⑤Frequency control range (Absolute pull range*)		
CS	C	±30 × 10^{-6} / −20 to +70 °C	S	±140 × 10^{-6} Min.	(±100 × 10^{-6} Min.)
PS	P	±37 × 10^{-6} / −40 to +85 °C	S	±140 × 10^{-6} Min.	(±95 × 10^{-6} Min.)
CQ	C	±30 × 10^{-6} / −20 to +70 °C	Q	±120 × 10^{-6} Min.	(±80 × 10^{-6} Min.)
PQ	P	±37 × 10^{-6} / −40 to +85 °C	Q	±120 × 10^{-6} Min.	(±75 × 10^{-6} Min.)

⑥Supply voltage	
E	1.8 V Typ.
B	2.8 V Typ.
C	3.3 V Typ.

* Absolute pull range = Frequency control range- (Frequency tolerance + 5 years Aging + Free fall + Vibration)

External dimensions (Unit:mm)

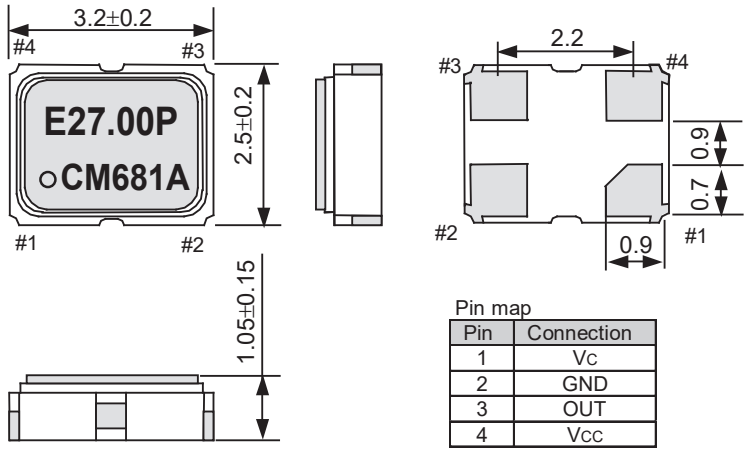

Pin map

Pin	Connection
1	Vc
2	GND
3	OUT
4	Vcc

Footprint (Recommended) (Unit:mm)

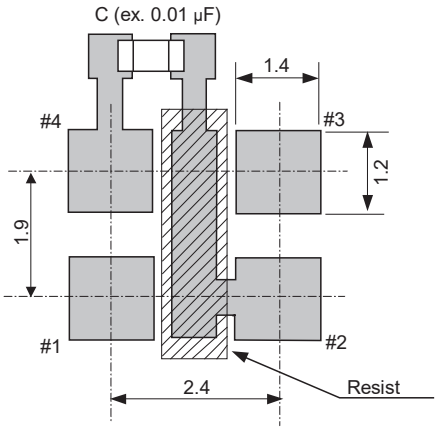

To maintain stable operation, provide a 0.01uF to 0.1uF by-pass capacitor at a location as near as possible to the power source terminal of the crystal product (between Vcc - GND).

VOLTAGE-CONTROLLED CRYSTAL OSCILLATOR (VCXO)

OUTPUT : LV-PECL, LVDS

Pb Free
RoHS Compliant

Product Number
VG3225EFN X1G005361xxxx00
VG5032EFN X1G005471xxxx00
VG7050EFN X1G005491xxxx00
VG3225VFN X1G005461xxxx00
VG5032VFN X1G005481xxxx00
VG7050VFN X1G005501xxxx00

VG3225 / 5032 / 7050EFN
VG3225 / 5032 / 7050VFN

- Frequency range : 25 MHz to 250 MHz
- Supply voltage : 3.3 V Typ.
- Output : LV-PECL or LVDS
- Function : Output enable (OE)
- Absolute pull range : ±10 × 10^{-6} Min. /±20 × 10^{-6} Min. / ±50 × 10^{-6} Min
- Operating temperature : -40 °C to +85 °C /-40 °C to +105 °C

VG3225EFN
VG3225VFN
(3.2 × 2.5 × 1.05 mm)

VG5032EFN
VG5032VFN
(5.0 × 3.2 × 1.3 mm)

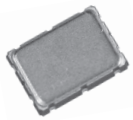
VG7050EFN
VG7050VFN
(7.0 × 5.0 × 1.5 mm)

Specifications (characteristics)

Item	Symbol	Specifications LV-PECL: VG3225EFN / VG5032EFN / VG7050EFN	Specifications LVDS: VG3225VFN / VG5032VFN / VG7050VFN	Conditions / Remarks	
Output frequency range	fo	25 MHz to 250 MHz		Please contact us for available frequencies, and frequency inquiries above 250 MHz.	
Supply voltage	V_{CC}	C: 3.3 V ± 0.165 V			
Control voltage	Vc	1.65 V ±1.65 V			
Storage temperature	T_stg	-55 °C to +125 °C			
Operating temperature	T_use	G: -40 °C to +85 °C, H: -40 °C to +105 °C			
Frequency tolerance	f_tol	J: ±50 × 10^{-6} Max.		Includes initial frequency tolerance, temperature variation, supply voltage change and 10 years aging (+25 °C) at Vc = 1.65 V	
Absolute Pull range *1	APR	B: ±50 × 10^{-6} Min.		25 MHz ≤ fo ≤ 42.5 MHz, 50 MHz ≤ fo ≤ 85 MHz, 100 MHz ≤ fo ≤ 170 MHz	
		M: ±20 × 10^{-6} Min.		Full frequency range	
		S: ±10 × 10^{-6} Min.		Full frequency range	
Current consumption	I_{CC}	60 mA Max.	25 mA Max.	OE = V_{CC}, L_ECL = 50 Ω or L_LVDS = 100 Ω	
Disable current	I_dis	25 mA Max.	15 mA Max.	OE = GND	
Input impedance	Zin	10 MΩ Min.		DC level	
Frequency change polarity	-	Positive slope		V_C = 0 V to 3.3 V	
Symmetry	SYM	45 % to 55 %		At output crossing point	
Output voltage (LV-PECL)	V_{OH}	V_{CC} - 1.1 V Min.	–	DC characteristics	
	V_{OL}	V_{CC} - 1.5 V Max.	–		
Output voltage (LVDS)	V_{OD}	–	250 mV to 450 mV	Differential output voltage, V_{OD1}, V_{OD2}	DC characteristics
	V_{OS}	–	1.15 V to 1.35 V	Offset voltage, V_{OS1}, V_{OS2}	
ECL load condition	L_ECL	50 Ω	–	Terminated to V_{CC} - 2.0 V	
LVDS load condition	L_LVDS	–	100 Ω	Connected between OUT to $\overline{OUT}$	
Input voltage	V_{IH}	70 % V_{CC} Min.		OE terminal	
	V_{IL}	30 % V_{CC} Max.			
Rise/Fall times	tr / tf	0.5 ns Max..	0.3 ns Max.	LV-PECL: Between 20 % and 80 % of (V_{OH} - V_{OL}) LVDS: Between 20 % and 80 % of Differential Output peak to peak voltage	
Startup time	t_str	10 ms Max.		Time at minimum supply voltage to be 0 s	
Phase Jitter	t_{PJ}	120 fs Max.	160 fs Max.	fo = 122.88 MHz	Offset Frequency 12 kHz to 20 MHz
		80 fs Max.	80 fs Max.	fo = 245.76 MHz	

*1 Absolute pull range = Frequency control range- Frequency tolerance
* Please keep Vc pin open or ground while powering up V_{CC}.

Product Name (Standard form): VG3225 EFN 122.880000MHz C J G H B A
① ② ③ ④⑤⑥⑦⑧⑨
①Model ②Output (E: LV-PECL, V: LVDS) ③Frequency
④Supply voltage (C: 3.3 V Typ.) ⑤Frequency tolerance ⑥Operating temperature
⑦OE Function ⑧Absolute Pull Range ⑨Output Standby Type (A: High-Z)

⑤Frequency tolerance	
J	±50 × 10^{-6}

⑥Operating temperature	
G	-40 to +85 °C
H	-40 to +105 °C

⑦OE Function	
H	Active High

⑧Absolute Pull Range	
B	±50 × 10^{-6}
M	±20 × 10^{-6}
S	±10 × 10^{-6}

Figure 1 Available combination of ③Output frequency (fo) and ⑧Absolute Pull Range (APR)

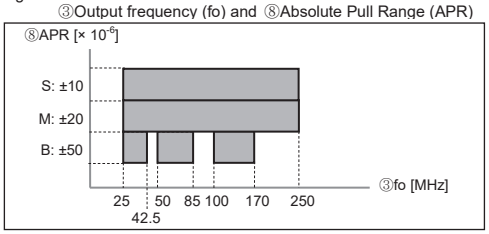

External dimensions (Unit:mm)

VG7050EFN
VG7050VFN

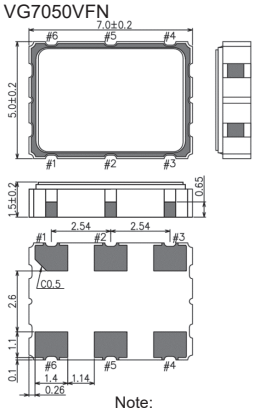

VG5032EFN
VG5032VFN

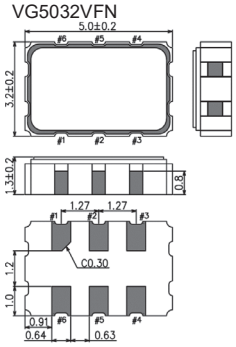

VG3225EFN
VG3225VFN

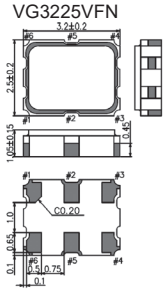

Pin map

Pin	Connection
1	Vc
2	OE
3	GND
4	OUT
5	$\overline{OUT}$
6	V_{CC}

Note:
OE pin = HIGH or "Open": Specified frequency output.
OE pin = LOW: Output is high impedance

Footprint (Recommended) (Unit:mm)

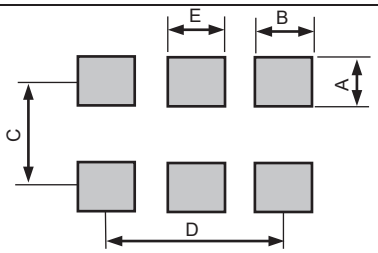

	VG3225EFN VG3225VFN	VG5032EFN VG5032VFN	VG7050EFN VG7050VFN
A	1.05	1.60	2.00
B	0.92	0.89	1.80
C	1.85	2.60	4.20
D	2.58	2.54	5.08
E	0.80	0.89	1.80

In order to achieve optimum jitter performance, it is recommended that 0.1 μF and 10 μF bypass capacitors should be connected between V_{CC} and GND and placed as close to the V_{CC} pin as possible.

VOLTAGE -CONTROLLED CRYSTAL OSCILLATOR (VCXO)

OUTPUT: LV-PECL

Pb Free
RoHS Compliant

Product Number
X1G004551xxxx00

VG7050EBN

- Frequency range : 600 MHz to 800 MHz
- Supply voltage : 2.5 V / 3.3 V
- External dimensions : 7.0 × 5.0 × 1.5 mm (6 pins)
- Absolute Pull Range : ±50 × 10^{-6}Min.,±100 × 10^{-6}Min.
- Function : Output Enable(OE)
- Output : LV-PECL

Specifications (characteristics)

Item	Symbol	Specifications	Conditions / Remarks
Output frequency range	fo	600.000 MHz to 800.000 MHz	Please contact us about available frequencies.
		698.8123 MHz, 753.6211 MHz, 794.7278 MHz	Standard frequency
Supply voltage	Vcc	D: 2.5 V ± 0.125 V, C: 3.3 V ± 0.33 V	
Storage temperature range	T_stg	-55 °C to +125 °C	Store as bare product after packing
Operating temperature range	T_use	-40 °C to +85 °C	
Frequency tolerance*1	f_tol	±50 × 10^{-6} Max.	Includes frequency aging (10 years)
Current consumption	Icc	90 mA Max.	
Absolute pull range	APR	±50 × 10^{-6} Min. ±100 × 10^{-6} Min.	Vc= 1.65 V ±1.35 V (Vcc = 3.3 V) Vc= 1.25 V ±1.00 V (Vcc = 2.5 V)
Input resistance	Rin	5 MΩ Min.	DC level
Frequency change polarity	-	Positive slope	0 to Vcc
Symmetry	SYM	45 % to 55 %	at outputs cross point
High output voltage	VOH	Vcc-1.025 V Min.	DC characteristics
Low output voltage	VOL	Vcc-1.62 V Max.	
Output load condition	L_ECL	50 Ω	Terminated to Vcc-2.0V
High input voltage	VIH	70% Vcc Min.	
Low input voltage	VIL	30% Vcc Max.	
Rise/Fall times	tr / tf	0.4 ns Max.	between 20% and 80% of (V_{OH}-V_{OL})
Oscillation start up time	t_str	10ms Max.	Time at minimum supply voltage to be 0 s
Phase Jitter	tPJ	0.2ps Typ.	Offset Frequency 12kHz to 20MHz

*1 Frequency tolerance includes initial frequency tolerance, temperature variation, supply voltage change and reflow drift and 10 years aging at +25 ºC.

Product name (Standard form)
VG7050 EBN 698.812335 MHz C J G H B Z
① ② ③ ④ ⑤ ⑥ ⑦ ⑧ ⑨

①Model ②Output (E: LV-PECL) ③Frequency ④Supply voltage (C: 3.3 V Typ., D: 2.5 V Typ.)
⑤Frequency tolerance (J: ±50 × 10^{-6} Max.) ⑥Operating temperature (G: -40 to +85°C)
⑦OE Function (H: Active High, L: Active Low) ⑧Absolute Pull Range (B: ±50 × 10^{-6} Min., C: ±100 × 10^{-6} Min.)
⑨Output Standby Type (F: Fix (OUT="L", OUTN="H"), Z: High-Z)

OE Function / OE Standby Type

OE Function	OE Standby Type	Frequency output OE pin	Oscillator Stop	
			OE pin	OUT,OUTN state
H: High Active	Z: High-Z	"H" or "OPEN"	"L"	High Impedance
L: Low Active		"L" or "OPEN"	"H"	
H: High Active	F: Fix	"H" or "OPEN"	"L"	OUT="L", OUTN="H"
L: Low Active		"L" or "OPEN"	"H"	

External dimensions (Unit :mm)

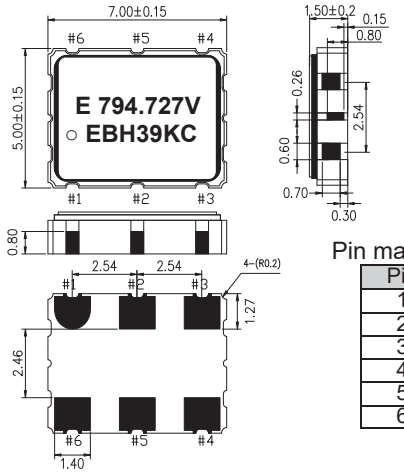

Pin map

Pin	Connection
1	Vc
2	OE
3	GND
4	OUT
5	OUTN
6	Vcc

Footprint (Recommended) (Unit :mm)

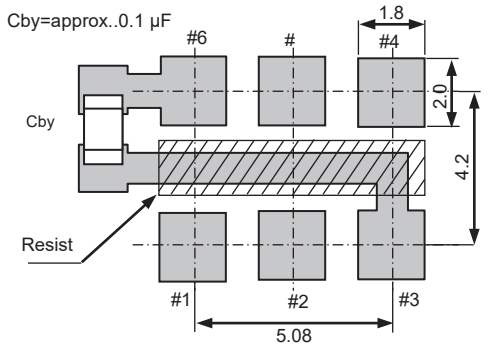

To maintain stable operation, provide by-pass capacitor with approximately 0.1 μF at a location as near as possible to the power source terminal of the crystal products (between Vcc - GND).

VOLTAGE-CONTROLLED SAW OSCILLATOR (VCSO)

Output: LV-PECL

LOW PHASE JITTER

Product Number
X1M00052xxxxxxx

EV7050EAN

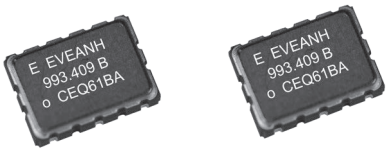

- Low phase jitter : 18 fs typ. *3
- Frequency range : 750 MHz to 1100 MHz
  : 1500 MHz to 2200 MHz
- Function : OUTPUT disable(OE)/Standby(ST)
- Supply voltage : 3.3 V
- Absolute pull range : $\pm 50 \times 10^{-6}$ Min./ $\pm 30 \times 10^{-6}$ Min.
- External dimensions: 7.0 × 5.0 × 1.6(t) mm
- Output : LV-PECL

Application : OTN(40GbE,100GbE,400GbE),
High Speed ADCs and DACs, Test Instrument

Specifications (characteristics)

Type OE

Item	Symbol	EV7050EAN		Conditions / Remarks	
Output frequency range	fo	750 MHz to 1100 MHz / 1500 MHz to 2200 MHz		Please contact us about available frequencies	
Supply voltage	Vcc	3.3 V ±0.165 V			
Storage temperature	T_stg	-55 °C to +125 °C		Storage as single product	
Operating temperature	T_use	-10 °C to +85 °C	-40 °C to +85 °C		
Frequency tolerance *1	f_tol	-100×10^{-6} to $+100 \times 10^{-6}$	-120×10^{-6} to $+120 \times 10^{-6}$		
Absolute pull range *2	APR	$\pm 50 \times 10^{-6}$ Min	$\pm 30 \times 10^{-6}$ Min		
Current consumption	Icc	f_0=750 to 1100 MHz : 115 mA Max f_0=1500 to 2200 MHz : 175 mA Max			
Output disable current	I_dis	f_0=750 to 1100 MHz : 80 mA Max f_0=1500 to 2200 MHz : 135 mA Max			
Input resistance	Rin	50 kΩ Min		DC level	
Frequency change polarity	—	Positive slope			
Symmetry	SYM	45 % to 55 %		Reference is crossing point of OUT1 and OUT2	
Output voltage	VOH	Vcc -1.25 V Min		Output termination is L_ECL	
	VOL	Vcc -1.55 V Max		Output termination is L_ECL	
Input voltage	VIH	80% Vcc		OE terminal(#2)	
	VIL	20% Vcc			
Output load condition	L_ECL	50 Ω		Terminated to Vcc-2.0V	
Rise time / Fall time	tr / tf	0.125 ns Max		Between 20% and 80% of output single ended swing	
Start-up time	t_str	10 ms Max		Time at 90 %Vcc to be 0 s	
Enable delay time	tpzx	1.0 us Max		The time from release OE to Output signal	
Phase Jitter	tPJ	18fs typ. *3 40fs Max		990 MHz ≤ f_0 ≤ 1100 MHz 1980 MHz ≤ f_0 ≤ 2200 MHz	Offset frequency: 12 kHz to 20 MHz
		60fs Max		Except for the above	

Type ST

Item	Symbol	EV7050EAN		Conditions / Remarks	
Output frequency range	fo	750 MHz to 1100 MHz / 1500 MHz to 2200 MHz		Please contact us about available frequencies	
Supply voltage	Vcc	3.3 V ±0.165 V			
Storage temperature	T_stg	-55 °C to +125 °C		Storage as single product	
Operating temperature	T_use	-10 °C to +85 °C	-40 °C to +85 °C		
Frequency tolerance *1	f_tol	-100×10^{-6} to $+100 \times 10^{-6}$	-120×10^{-6} to $+120 \times 10^{-6}$		
Absolute pull range *2	APR	$\pm 50 \times 10^{-6}$ Min	$\pm 30 \times 10^{-6}$ Min		
Current consumption	Icc	f_0=750 to 1100 MHz : 115 mA Max f_0=1500 to 2200 MHz : 175 mA Max			
Standby current	I_std	7 mA Max			
Input resistance	Rin	50 kΩ Min		DC level	
Frequency change polarity	—	Positive slope			
Symmetry	SYM	45 % to 55 %		Reference is crossing point of OUT1 and OUT2	
Output voltage	VOH	Vcc -1.25 V Min		Output termination is L_ECL	
	VOL	Vcc -1.55 V Max		Output termination is L_ECL	
Input voltage	VIH	80% Vcc		ST terminal(#2)	
	VIL	20% Vcc			
Output load condition	L_ECL	50 Ω		Terminated to Vcc-2.0V	
Rise time / Fall time	tr / tf	0.125 ns Max		Between 20% and 80% of output single ended swing	
Start-up time	t_str	10 ms Max		Time at ST terminal is VIH(Active Low is VIL) to be 0 s	
Resume time	t_res	10 ms Max			
Phase Jitter	tPJ	18fs typ. *3 40fs Max		990 MHz ≤ f_0 ≤ 1100 MHz 1980 MHz ≤ f_0 ≤ 2200 MHz	Offset frequency: 12 kHz to 20 MHz
		60fs Max		Except for the above	

*1 Frequency tolerance includes initial frequency tolerance, temperature variation, supply voltage change, reflow drift, and aging (+25°C, 10 years).
*2 Absolute pull range (APR) = Frequency control range - Frequency tolerance
*3 Put bypass capacitor (0.1uF and 10uF) near by Vcc terminal for jitter performance.

Product Name (Standard form) EV7050 EAN 1986.819000MHz C L E H B A
① ② ③ ④⑤⑥⑦⑧⑨

①Model ②Output(E: LV-PECL) ③Frequency
④Supply voltage (C: 3.3 V Typ.) ⑤Frequency tolerance
⑥Operating temperature ⑦OE function
⑧Absolute pull range(APR)
⑨Internal identification code ("A" is default)

④Supply voltage	⑤Frequency tolerance	⑥Operating temperature	⑦OE function	⑧APR	⑨identification code
C:3.3V Typ	L: -100~+100× 10^{-6}	E: -10 ~ +85°C	H:OE Active High L:OE Active Low S:ST Active High T:ST Active Low	B: ±50 × 10^{-6} Min.	A
	U: -120~+120× 10^{-6}	G: -40 ~ +85°C		A: ±30 × 10^{-6} Min.	

OE Standby Type

Product	Oscillation	Outputs
OE Active High	High: enable /Low: enable	High: enable(specified frequency) Low: disable(Hi-Z)
OE Active Low	High: enable /Low: enable	High: disable(Hi-Z) Low: enable(specified frequency)
ST Active High	High: enable /Low: disable	High: enable(specified frequency) Low: disable(Hi-Z)
ST Active Low	High: disable /Low: enable	High: disable(Hi-Z) Low: enable(specified frequency)

External dimensions (Unit :mm)

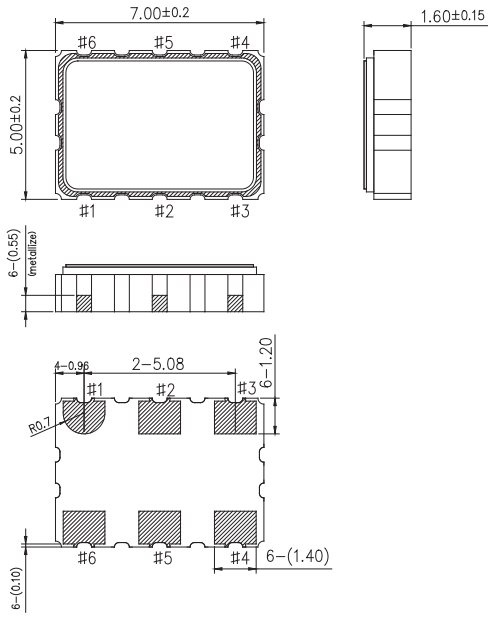

Pin map

Pin	Connection
1	Vc
2	OE/ST
3	GND
4	OUT1 (Positive)
5	OUT2 (Negative)
6	Vcc

Footprint(Recommended (Unit :mm)

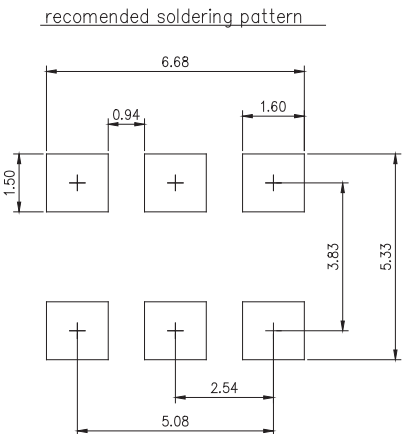

Programmable Voltage Controlled Oscillator (VCXO)
Output: LV-PECL

VG7050EAN / ECN

Pb Free
RoHS Compliant

Product Number
EAN : X1G004541xxxx00
ECN : X1G004561xxxx00

- Frequency range : 50 MHz to 800 MHz (Tuning resolution: 2.2 ~ 2.8 x10^{-9})
- Supply voltage : 2.5 V / 3.3 V
- External dimensions : EAN : 7.0 × 5.0 × 1.5 mm (8 pins)
  ECN : 7.0 × 5.0 × 1.5 mm (10 pins)
- Absolute Pull Range : ±0 to ±180 x 10^{-6} (12 steps selectable)

Features
- EAN : User-specified one startup frequency, APR and 7-bit I^2C address
- ECN : User-specified four startup frequency, APR and 7-bit I^2C address
- User Programming : I^2C Interface
- Low jitter PLL technology

Applications
SONET/SDH, OTN, GbE, Fibre Channel

*The I2C-Bus is a trademark of NXP Semiconductors

Specifications (characteristics)

Item	Symbol	Specifications	Conditions / Remarks
Output frequency range	fo	50 MHz to 800 MHz	It can be changed by I^2C
Supply voltage	V_{CC}	D: 2.5 V ± 0.125 V, C: 3.3 V ± 0.33 V	
Storage temperature	T_stg	-55 ºC to +125 ºC	Store as bare product after packing
Operating temperature	T_use	-40 ºC to +85 ºC	
Frequency tolerance *1	f_tol	±50 × 10^{-6}	Includes frequency aging (10 years)
Current consumption	I_{CC}	90 mA Max.	OE Active, L_ECL=50 Ω
Disable current	I_dis	40 mA Max.	OE Inactive, Output Standby: Hi-Z mode
		70 mA Max.	OE Inactive, Output Standby: Fix mode
Absolute pull range	APR	±0 to ±180 x10^{-6}	V_C = 1.65 V ± 1.35 V (V_{CC} = 3.3 V)
		±0 to ±180 x10^{-6}	V_C = 1.25 V ± 1.00 V (V_{CC} = 2.5 V)
Control voltage tuning range	V_C	0 to V_{CC}	
Frequency change polarity	-	Positive slope	
Symmetry	SYM	45 % to 55 %	At outputs crossing point
Output voltage	V_{OH}	V_{CC}-1.025 V Min.	DC characteristics
	V_{OL}	V_{CC}-1.62 V Max.	
Output load condition	L_ECL	50 Ω	Termination to V_{CC} - 2.0 V
Input voltage	V_{IH}	70% V_{CC} Min.	EAN : OE, SDA and SCL ECN : OE, FSEL0, FSEK1, SDA and SCL
	V_{IL}	30% V_{CC} Max.	
Rise time / Fall time	tr / tf	400 ps Max.	Between 20% and 80% of (V_{OH}-V_{OL})
Start-up time	t_str	10 ms Max.	Time at minimum supply voltage to be 0 s

*1 Frequency tolerance includes initial frequency tolerance, temperature variation, supply voltage change, reflow drift and 10 years aging at +25 ºC.

Product name (Standard form)

VG7050 EAN	SM18xxxx	C	J	G	H	P	Z
① ②	③	④	⑤	⑥	⑦	⑧	⑨

①Model
②Output (E: LV-PECL)
③Parameter Designator (EAN : SM18xxxx, ECN : SM20xxxx)
④Supply voltage (C: 3.3 V Typ., D: 2.5 V Typ.)
⑤Frequency tolerance (J: ±50 × 10^{-6})
⑥Operating temperature (G: -40 ~ +85°C)
⑦OE Function (H: Active High, L: Active Low)
⑧Absolute Pull Range (P: Programmable)
⑨Output Standby Type (F: Fix (OUT=”L”, OUTN=”H”), Z: High-Z)

Phase Jitter

	Offset Frequency	125.00 MHz	156.25 MHz	250.00 MHz	425.00 MHz	622.08 MHz	669.33 MHz	794.73 MHz
Phase jitter*2 Typ.	12 kHz to 20 MHz	0.30 ps	0.26 ps	0.26 ps	0.25 ps	0.26 ps	0.26 ps	0.26 ps
	20 kHz to 50 MHz	0.30 ps	0.27 ps	0.27 ps	0.26 ps	0.27 ps	0.27 ps	0.27 ps
	50 kHz to 80 MHz	0.29 ps	0.27 ps	0.27 ps	0.26 ps	0.27 ps	0.27 ps	0.27 ps

*2 In order to achieve optimum jitter performance, it is recommended that the capacitor (0.1 µF + 10 µF) between V_{CC} and GND pin should be placed as close to the V_{CC} pin as possible.

Block diagram

VG7050EAN

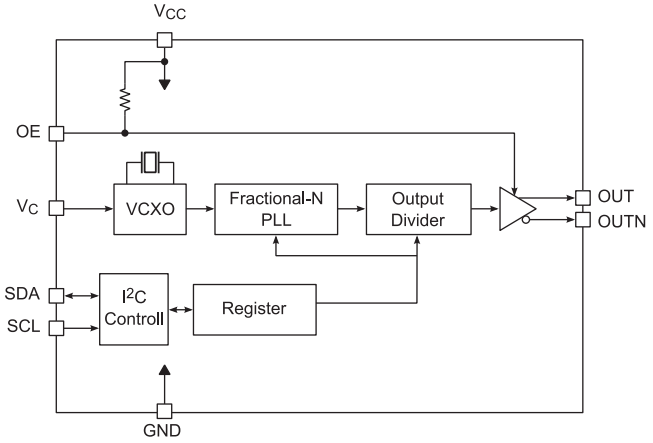

VG7050ECN

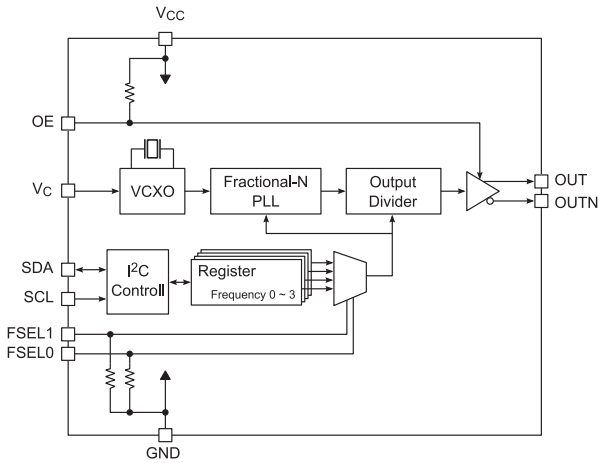

OE Function / OE Standby Type

OE Function	OE Standby Type	Frequency output OE pin	Oscillator Stop	
			OE pin	OUT,OUTN state
H: High Active	Z: High-Z	"H" or "OPEN"	"L"	High Impedance
L: Low Active		"L" or "OPEN"	"H"	
H: High Active	F: Fix	"H" or "OPEN"	"L"	OUT="L", OUTN="H"
L: Low Active		"L" or "OPEN"	"H"	

External dimensions (Unit: mm)

VG7050EAN

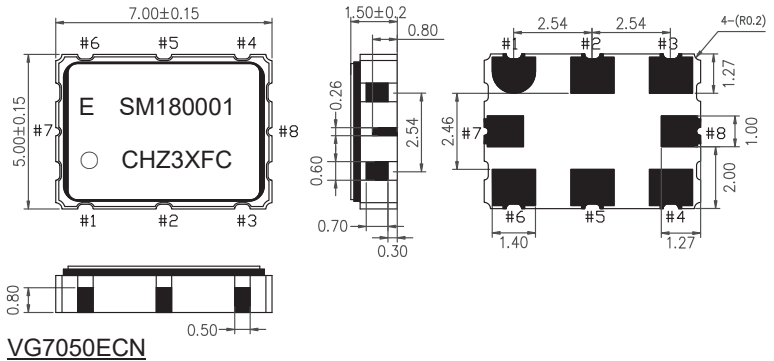

VG7050ECN

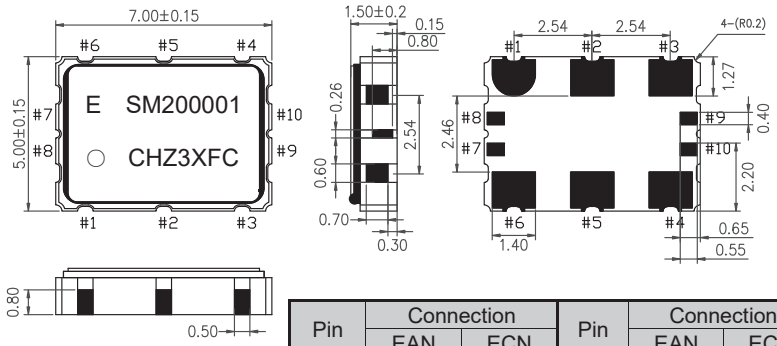

Pin	Connection		Pin	Connection	
	EAN	ECN		EAN	ECN
1	Vc	Vc	6	Vcc	Vcc
2	OE	OE	7	SDA	SDA
3	GND	GND	8	SCL	SCL
4	OUT	OUT	9	-	FSEL0
5	OUTN	OUTN	10	-	FSEL1

Footprint (Recommended) (Unit: mm)

VG7050EAN

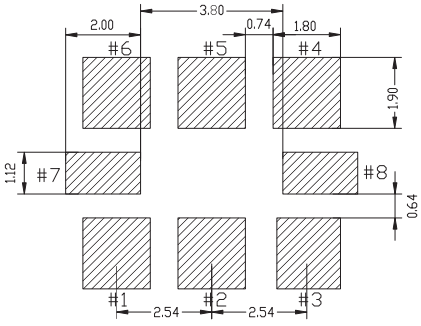

VG7050ECN

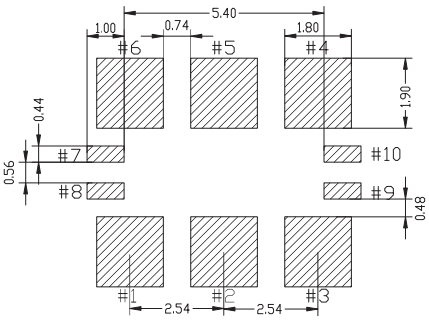

In order to achieve optimum jitter performance, it is recommended that the capacitor (0.1 μF + 10 μF) between VCC and GND pin should be placed as close to the VCC pin as possible.

►RF Transmitter Module

P	Model	Size (mm)	Feature	Operating temperature	Supply voltage	Current consumption (Max.)
97	**SR3225SAA (AEC-Q100)**	3.2×2.5×1.0 (t: Typ.)	UHF range wireless transmitter module. 300 ~ 400 MHz (0.25 kHz step) 600 ~ 930 MHz (0.49 kHz step) Modulation types: ASK / OOK / FSK SPI interface	-40 to +85 °C	1.8 V to 3.6V	16 mA

RF Transmitter Module Conforms to AEC-Q100
SR3225SAA

Product Number
SR3225SAA: X1G00479xxxxx00

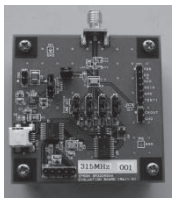

SR3225SAA is a wireless transmitter module for UHF range. Crystal resonator, oscillator, PLL and Power Amp are integrated in 3.2 mm x 2.5 mm ceramic package. The wireless transmission function can be configured by connect to the external control devices. It is suitable for small wireless transmitter. The evaluation kit is available.

Application
- Remote Keyless Entry, Passive Entry
- Short range radio data transmitter
- Garage door opener
- Transmitter for RFID tag

Overview

- Carrier frequency bands:
  300 MHz ~ 465 MHz (0.25 kHz Step),
  600 MHz ~ 930 MHz (0.49 kHz Step)
- Δ-Σ fractional-N based PLL
- Programmable Power Amp output power:
  -15 ~ 11 dBm, 128 steps
- Modulation types: ASK/OOK/FSK with Soft-ASK and/or Soft FSK shaping
- 3-wire/4-wire SPI interface
- SFR (Special Function Register)
- Embedded 32 MHz crystal resonator and oscillation circuit
- Programmable clock output via CKOUT
- Programmable voltage threshold of Under Voltage Detection: 4 steps (1.8 V ~ 2.4 V)
- Fail-Safe mechanism (PLL Loss of Lock, VCO auto-calibration error, Under Voltage Detection)

Block diagram

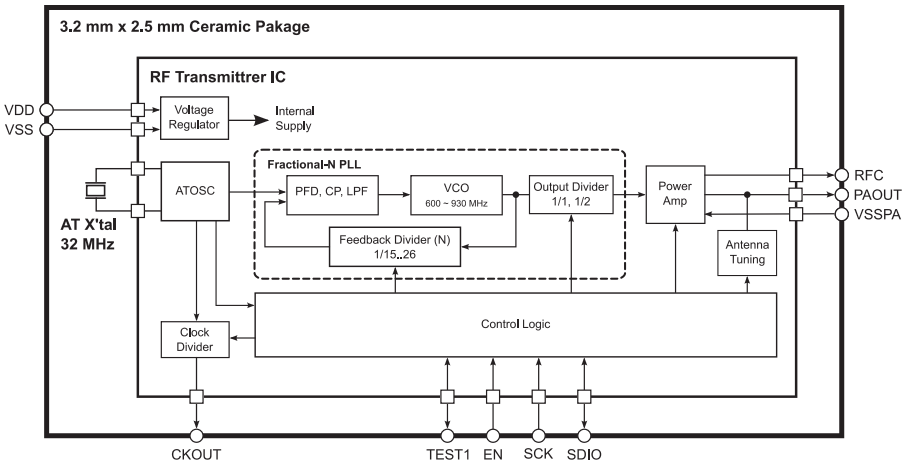

Specification (characteristics)

Parameter	Symbol	Condition	Min.	Typ.	Max.	Unit
Supply voltage	VDD	-	1.8	3.0	3.6	V
Operation temperature	Ta	-	-40	-	+85	°C
Storage temperature	Tstg	-	-40	-	+125	°C
Supply current Powerdown Mode	I_{DDPD}	VDD = 3.0 V, Ta = +25 °C	-	20	100	nA
Supply current Transmitter-Active Mode	I_{DDTMA}	F_{TX} = 315 MHz, Pout = 5 dBm,	-	10.0	11.0	mA
		F_{TX} = 315 MHz, Pout = 8 dBm,	-	12.7	13.7	
		F_{TX} = 315 MHz, Pout = 10 dBm,	-	15.0	16.0	
Carrier frequency bands	F_{TX}	-	300	-	465	MHz
			600	-	930	
ASK Bit rate	R_{ASK}	NRZ	-	-	100	kbps
FSK Bit rate	R_{FSK}	NRZ	-	-	50	kbps
Crystal frequency tolerance	F_{TOL}	Ta = +25 °C, without aging	-2	-	2	ppm
Crystal temperature variation	F_{TC}	-40 °C ~ +85 °C	-20	-	20	ppm
Nominal output power	P_{OUT}	Ta = +25 °C, VDD = 3.0 V, F_{TX} = 315 MHz, HPWR =1, AM* = 0x3F	10	11	12	dBm
		Ta = +25 °C, VDD = 3.0 V, F_{TX} = 315 MHz, HPWR =0, AM* = 0x01	-16	-15	-14	

External dimensions (Unit: mm)

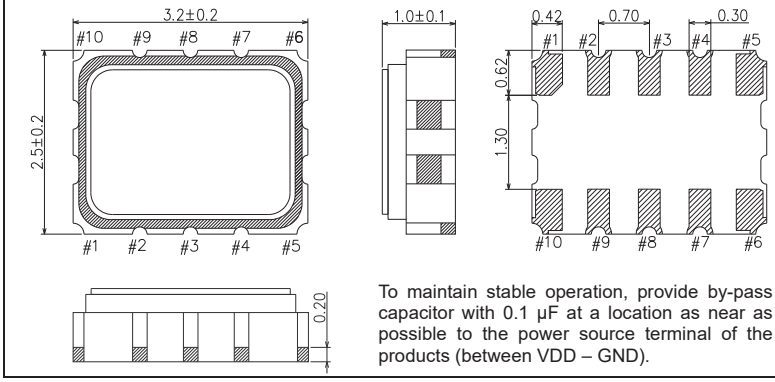

To maintain stable operation, provide by-pass capacitor with 0.1 μF at a location as near as possible to the power source terminal of the products (between VDD – GND).

Pin descriptions

Pin No.	Pin Name	Function
1	TEST1	Test, Transmission data input or SPI interface data output
2	EN	Enable input or SPI interface chip select
3	SCK	SPI interface clock input
4	SDIO	SPI data input / output or Transmission data input
5	CKOUT	Clock output
6	VSSPA	GND for Power Amp
7	PAOUT	Power Amp output
8	RFC	RF choke coil connect pin
9	VDD	Positive power supply
10	VSS	GND

Sensing Device

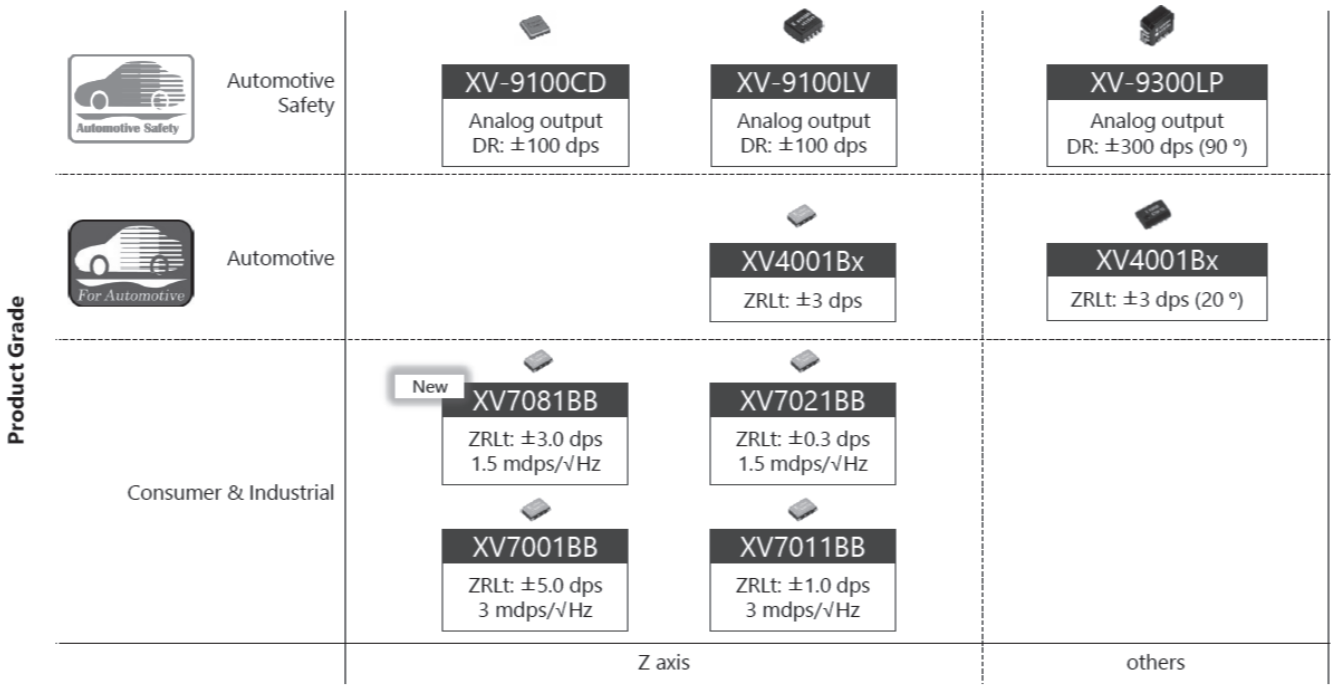

► Gyro Sensor

P	Model	Size [mm]	Supply Voltage [V]	Interface Type	Bias	Rate Range [°/s]	Scale Factor [mV/(°/s)]	Non Linearity [%FS]	Operating Temperature [°C]	Recommended Application
102	**XV7021BB**	5.0×3.2×1.3t	2.7 to 3.6	Digital (SPI / I²C)	0 [LSB] Typ. ± 1 [°/s]	±400	24bit: 17920 [LSB/(°/s)] ± 5 [%]	± 0.5	-20 to +80 (Please contact us about -40 °C to +85 °C)	Anti vibration and attitude control for industrial applications etc. Motion detection for Man machine interface
103	**XV7081BB**									
104	**XV7011BB**					±100	24bit: 71680 [LSB/(°/s)] ± 5 [%]			
105	**XV7001BB**						16bit: 280 [LSB/(°/s)] ± 5 [%]		-20 to +80	
106	**XV-3510CB**		2.7 to 3.3	Analog Voltage	1430 [mV]	±300	3.0	± 0.5	-20 to +80	Detection picture stabilization

► Gyro sensor for automotive

P	Model	Size [mm]	Supply Voltage [V]	Interface Type	Bias	Rate Range [°/s]	Scale Factor [mV/(°/s)]	Non Linearity [%FS]	Operating Temperature [°C]	Recommended Application
131	**XV-9100CD (AEC-Q100)**	5.0×5.0×1.3t	4.75 to 5.25	Analog Voltage	0.5 × V_{DD} [V]	±100	0.004 × V_{DD}	± 0.5	-40 to +105	Electric Stability Control System, Rollover Protection System
	XV-9300CD (AEC-Q100)					±300	0.0012 × V_{DD}			
132	**XV-9100LV (AEC-Q100)**	7.0×6.8×3.3t				±100	0.004 × V_{DD}		-40 to +125	
	XV-9300LV (AEC-Q100)					±300	0.0012 × V_{DD}			
	XV-9100LP (AEC-Q100)	9.5×5.0×7.2t				±100	0.004 × V_{DD}			
	XV-9300LP (AEC-Q100)					±300	0.0012 × V_{DD}			
133	**XV4001KC (AEC-Q200)**	6.0×4.8×3.3t Inclined	3.0 to 3.6	Digital (I^2C-Bus)	0 [LSB] Typ. ± 2 [°/s]	±70	370 [LSB/(°/s)] ±1.5 [%]	± 0.5	-40 to +85	Car navigation system
	XV4001KD (AEC-Q200)			Digital (SPI-Bus)						
	XV4001BC (AEC-Q200)	5.0×3.2×1.3t		Digital (I^2C-Bus)						
	XV4001BD (AEC-Q200)			Digital (SPI-Bus)						

■ IMU Product Line-up

- M-G370PDS0 : Low Noise and High Stability IMU
- M-G370PDF1 : Wide Dynamic Range and High Stability IMU
- M-G365PDC1/PDF1 : Dynamic Tilt Function IMU
- M-G552 Series : Water and Dust Proof IMU with J1939, CANopen and RS422 Interface (Interface is selectable)

Product Name			New M-G370PDS0	M-G370PDF1	M-G365PDC1 /PDF1	M-G552 Series*
Features			Low Noise High Stability	Wide Dynamic Range High Stability	Dynamic Tilt Function	Water and Dust proof
Gyroscope	Bias Instability	°/h	0.8	0.8	1.2	1.2
	Dynamic Range	°/s	± 200	± 450		± 450
	Random Walk	°/√h	0.03	0.06	0.08	0.08
	Band Width	Hz(Max.)	189	189	472	472
Accelero meter	Dynamic Range	G	± 10	± 10	± 4 / ± 10	± 10
	Initial Bias	mG, σ	2	2	3	4
Misalignment (Gyro/Accelerometer)		°	0.01			0.01
Current Consumption		mA(Typ.)	16			32 @12 V
Voltage Supply		V	3.3			9 ～ 32
Operating Temperature		℃	- 40 ～ + 85			-30 ～ +80
Interface			SPI / UART			J1939 (CANopen and RS422 is selectable by product code)
Size		mm^3	24 x 24 x 10			65 x 60 x 30
Weight		g	10			115
Dynamic Tilt Function EKF(Extended Kalman Filter)			---	---	Built in	Built in
Functions			External Trigger Input, etc			IP67
Product Image			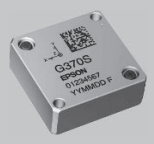	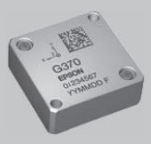		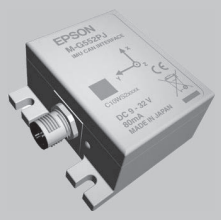

Please contact us for information on RoHS and Reach.

* The product model number and specification values are determined by the built-in IMU.
The values on this page are the specifications of M-G552PJ1x. Please contact us for detailed information on other products.
Interface is selectable by product code.

■ Vibration Sensor / Accelerometer Product Line-up

- M-A342VD10 : Built-in Type Vibration sensor (UART / SPI Interface), ISO 10816 and ISO 20816 compliant
- M-A542VR10 : Water and Dust Proof Vibration sensor (RS422 Interface), ISO 10816 and ISO 20816 compliant
- M-A352AD10 : Built-in Type, High Shock Resistance (UART / SPI Interface)
- M-A552AC10/AR10 : Water and Dust Proof, High Shock Resistance (CAN / RS422 Interface)

Vibration Sensor

Product Name		New M-A342VD10	New M-A542VR10
Features		Built-in Type	Water and Dust Proof (IP67)
Interface		UART / SPI Selectable	RS422
Transfer Speed	bps	115.2 k～921.6 k(Default 460.8 k)	
Detected Axis		3(X/Y/Z)	
Physical Output Formats		Velocity and Displacement	
Output Formats		raw, rms, p-p (digital output)	
Dynamic Range	Velocity mm/s	± 100	
	Displacement mm	± 200	
Measured Frequency Range	Velocity Hz	10 ～ 1,000	
	Displacement Hz	1 ～ 100	
Operating Temperature	℃	-30 ～ +85	-30 ～ +70
Current Consumption	mA(Typ.)	29 @ 3.3 V	51 @12 V
Voltage Supply	V	3.15 ～ 3.45	9 ～ 32
Size	mm^3	48 x 24 x 16	65 x 60 x 30
Weight	g	25	128
Product Image			

Accelerometer

Product Name		M-A352AD10	M-A552AC10 M-A552AR10
Features		Built-in Type High Shock Resistance	Water and Dust Proof (IP67) High Shock Resistance
Interface		UART / SPI Selectable	CANopen:M-A552AC10 RS-422 :M-A552AR10
Noise Density	μG/Hz	0.2	0.5
Input Range	G	± 15	± 15
Detected Axis		3(X/Y/Z)	3(X/Y/Z)
Physical Output Formats		Acceleration, Tilt Angle (Selectable on each axis)	Acceleration, Tilt Angle (Selectable on each axis)
Measured Frequency Range	Hz	DC ～ 460	DC ～ 460
Output Rate	Sps(Max.)	1,000	1,000
Resolution	μG/LSB	0.06	0.06
Shock	G(Max.)	1,000	1,000
Operating Temperature	℃	-30 ～ +85	-30 ～ +70
Current Consumption	mA(Typ.)	13.2	35@12 V:M-A552AC10 49@12 V:M-A552AR10
Voltage Supply	V	3.3	9 ～ 32
Size	mm^3	48 x 24 x 16	65 x 60 x 30
Weight	g	25	128
Product Image			

Please contact us for information on RoHS and Reach.

GYRO SENSOR (Digital Output)

XV7021BB

Product number
XV7021BB: X2A000311xxxx00

- Excellent bias temperature coefficient 0.0016 (°/s)/°C Typ.
- Low angle random walk 0.065 °/√h Typ.
- Integrated user-selectable digital filter and detuning frequency eliminate filter
- SPI or I²C serial interface
- Angular rate output (16 bits or 24 bits resolution)
- Operating temperature -20 °C to +80 °C
- Embedded temperature sensor
- Low current consumption 900 µA Typ.

Recommended Application

- Anti-vibration and attitude control for industrial applications etc.
- Motion detection for human machine interface

*The I²C-Bus is a trademark of NXP Semiconductors

Specifications (characteristics)

Item	Symbol	Specifications	Conditions / Remarks
Supply voltage	V_{DDM}	2.7 V to 3.6 V	
Supply voltage for interface	V_{DDI}	1.65 V to 3.6 V	
Storage temperature	T_{STG}	-40 °C to +85 °C	
Operating temperature	T_{OPR}	-20 °C to +80 °C	
Scale factor	S_o	70 LSB/(°/s) ±2 %	16 bits, T_a = +25 °C
		17920 LSB/(°/s) ±2 %	24 bits, T_a = +25 °C
Scale factor variation over temperature	S_{pt}	±3.0 %	V_{DDM} = 3 V, T_a = +25 ºC reference
Bias	ZRL	±1 °/s (0 LSB Typ.)	T_a = +25 °C
Bias variation over temperature A	ZRL_{ta}	±0.25 °/s	-10 °C to +50 °C, T_a = +25 ºC reference
Bias variation over temperature B	ZRL_{tb}	±1 °/s	-20 °C to +80 °C, T_a = +25 ºC reference
Bias temperature coefficient	ZRL_s	0.0016 (°/s)/°C Typ.	V_{DDM} = 3 V, Average of absolute value, ΔT = 1 ºC
Rate range	I	±400 °/s	
Non-linearity	NI	±0.5 %FS	T_a = +25 °C
Cross-axis sensitivity	CS	±5 %	T_a = +25 °C
Current consumption	I_{op1}	900 µA Typ.	
Sleep current	I_{op3}	3 µA Typ.	
Noise density	N_d	0.0015 (º/s)/√Hz	@ 10Hz, LPF default setting
Angle random walk	N	0.065 º/√h	

Product Name (Standard form): XV702 1 B B * *
① ②③④ ⑤ ⑥

① Model ② Detection axis (1: Z axis) ③ Package type (B: Ceramics 5032 size)
④ Output (B: SPI/I²C) ⑤ Frequency ⑥ Custom recognition (not necessary to specify)

External Dimensions (Unit: mm)

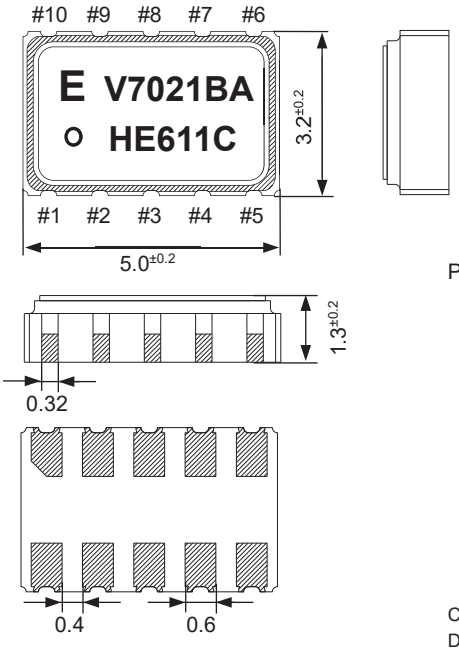

Pin map

Pin	Connection
1	MOSI/SDA
2	SS
3	V_{DDL}
4	Reserved1
5	GND
6	V_{DDM}
7	Reserved2
8	V_{DDI}
9	MISO/SA0
10	SCLK/SCL

Connect "Reserved1" pin to GND.
Do not connect "Reserved2" pin externally.

Footprint (Recommended) (Unit: mm)

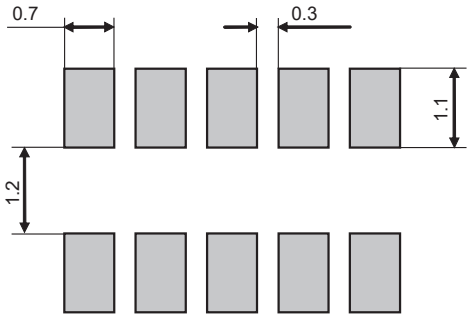

GYRO SENSOR (Digital Output)

XV7081BB

Product number
XV7081BB: X2A000351xxxx00

- Excellent bias temperature coefficient 0.0024 (°/s)/°C Typ.
- Low angle random walk 0.065 °/√h Typ.
- SPI or I²C serial interface
- Integrated user-selectable digital filter
- Angular rate output (16 bits or 24 bits resolution)
- Operating temperature -20 °C to +80 °C
- Embedded temperature sensor
- Low current consumption 900 µA Typ.

Recommended Application

- Anti-vibration, attitude control for industrial applications.
- Autonomous machines

*The I²C-Bus is a trademark of NXP Semiconductors

Specifications (characteristics)

Item	Symbol	Specifications	Conditions / Remarks
Supply voltage	V_{DDM}	2.7 V to 3.6 V	
Supply voltage for interface	V_{DDI}	1.65 V to 3.6 V	
Storage temperature	T_{STG}	-40 °C to +85 °C	
Operating temperature	T_{OPR}	-20 °C to +80 °C	
Scale factor	S_o	70 LSB/(°/s) ±2 %	16 bits, T_a = +25 °C
		17920 LSB/(°/s) ±2 %	24 bits, T_a = +25 °C
Scale factor variation over temperature	S_p	±3.0 %	V_{DDM} = 3 V, T_a = +25 ºC reference
Bias	ZRL	±1 °/s (0 LSB Typ.)	T_a = +25 °C
Bias variation over temperature	ZRL_t	±3.0 °/s	V_{DDM} = 3 V, T_a = +25 ºC reference
Bias temperature coefficient	ZRL_s	0.0024 (°/s)/°C Typ.	V_{DDM} = 3 V, Average of absolute value, ΔT = 1 ºC.
Rate range	I	±400 °/s	
Non-linearity	NI	±0.5 %FS	T_a = +25 °C
Cross-axis sensitivity	CS	±5 %	T_a = +25 °C
Current consumption	I_{op1}	900 µA Typ.	
Stand-by current	I_{op2}	160 µA Typ.	
Sleep current	I_{op3}	3 µA Typ.	
Noise density	N_d	0.0015 (º/s)/√Hz	@ 10Hz, LPF default setting
Angle random walk	N	0.065 º/√h	

Product Name (Standard form): XV708 1 B _*_ _*_
① ②③④ ⑤ ⑥
① Model ② Detection axis (1: Z axis) ③ Package type (B: Ceramics 5032 size)
④ Output (B: SPI/I²C) ⑤ Frequency ⑥ Custom recognition (not necessary to specify)

External Dimensions (Unit: mm)

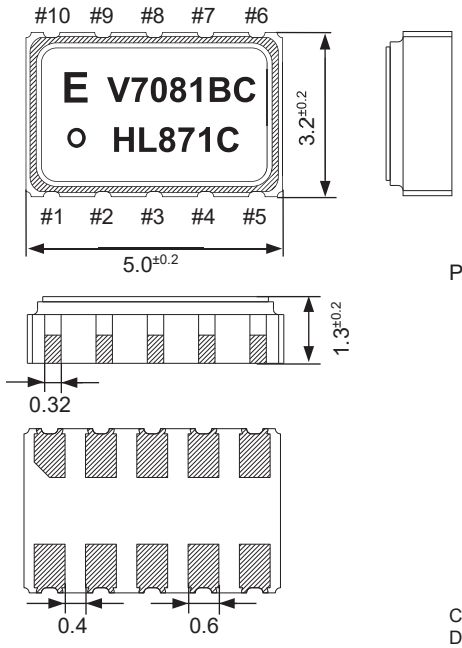

Pin map

Pin	Connection
1	MOSI/SDA
2	SS
3	V_{DDL}
4	Reserved1
5	GND
6	V_{DDM}
7	Reserved2
8	V_{DDI}
9	MISO/SA0
10	SCLK/SCL

Connect "Reserved1" pin to GND.
Do not connect "Reserved2" pin externally.

Footprint (Recommended) (Unit: mm)

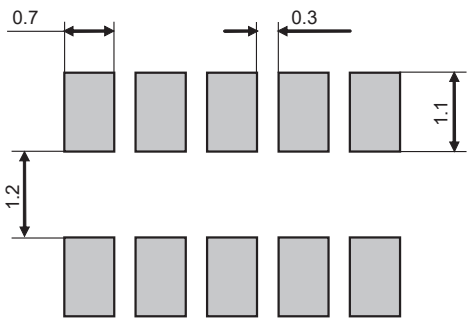

GYRO SENSOR (Digital Output)

XV7011BB

Pb Free
RoHS Compliant

Product number
XV7011BB: X2A000271xxxx00

- SPI or I²C serial interface
- Angular rate output (16/24bit)
- Excellent bias stability over temperature
- Operating temperature range -20 °C to +80 °C
  (Option: -40 °C to +85 °C)
- Built-in temperature sensor
- Built-in selectable digital filter
- Low power consumption

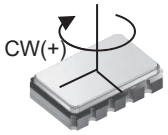

Recommended Application

- Anti vibration and attitude control for industrial applications etc.
- Motion detection for man machine interface

*The I2C-Bus is a trademark of NXP Semiconductors

Specifications (characteristics)

Item		Symbol	Specifications	Conditions / Remarks
Supply Voltage		VDDM	2.7 to 3.6 V	
Supply Voltage for interface		VDDI	1.65 V to 3.60 V	
Temperature range	Storage Temperature	TSTG	-40 °C to +85 °C	
	Operating Temperature	TOPR	-20 °C to +80 °C	Option:-40 °C to +85 °C
Scale factor		So	280 LSB/(°/s) ±5 %	16bit, Ta=+25 °C
			71680 LSB/(°/s) ±5 %	24bit, Ta=+25 °C
Bias		ZRL	±1 °/s (0 LSB Typ.)	Ta=+25 °C
Bias over temperature		ZRL_t	±1 °/s	Variation from Ta = +25 ºC
Rate range		I	±100 °/s	
Non linearity		NI	±0.5 %FS	Ta=+25 °C
Cross axes		CS	±5 %	Ta=+25 °C
Current consumption		Iop1	0.9 mA Typ.	Not communicating
Stand-by current		Iop2	160 μA Typ.	
Sleep current		Iop3	3 μA Typ.	
Noise		Nd	0.003 (º/s)/√Hz	at 10Hz

Product Name (Standard form)
XV701 1 B B * *
① ②③④ ⑤ ⑥
①Model ②Detection axis (1:Z-axis) ③Package type(B: Ceramic 5032size)
④Output (B: SPI/I²C) ⑤Frequency ⑥Custom recognition(not necessary to specify)

External Dimensions (Unit:mm)

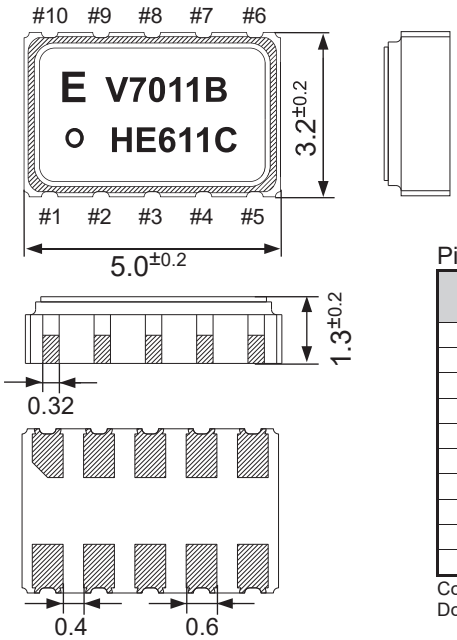

Pin map

Pin	Connection
	XV7011BB
1	MOSI/SDA
2	SS
3	VDDL
4	Reserved1
5	GND
6	VDDM
7	Reserved2
8	VDDI
9	MISO/SA0
10	SCLK/SCL

Connect "Reserved1" pin to GND.
Do not connect "Reserved2" pin externally.

Footprint (Recommended) (Unit:mm)

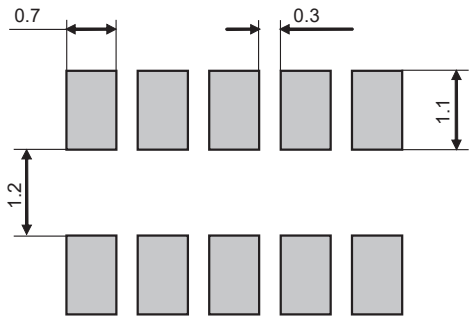

GYRO SENSOR (Digital Output)

XV7001BB

Pb Free
RoHS Compliant

Product number
XV7001BB: X2A000261xxxx00

- SPI or I²C serial interface
- Angular rate output (16bit)
- Built-in temperature sensor
- Built-in selectable digital filter
- Low power consumption

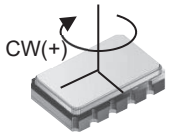

Recommended Application
- Anti vibration and attitude control for industrial applications etc.
- Motion detection for man machine interface

*The I2C-Bus is a trademark of NXP Semiconductors

Specifications (characteristics)

Item		Symbol	Specifications	Conditions / Remarks
Supply Voltage		VDDM	2.7 to 3.6 V	
Supply Voltage for interface		VDDI	1.65 V to 3.60 V	
Temperature range	Storage Temperature	TSTG	-40 °C to +85 °C	
	Operating Temperature	TOPR	-20 °C to +80 °C	
Scale factor		So	280 LSB/(°/s) ±5 %	16bit, Ta=+25 °C
Bias		ZRL	±1 °/s (0 LSB Typ.)	Ta=+25 °C
Bias over temperature		ZRL_t	±5 °/s	Variation from Ta = +25 ºC
Rate range		I	±100 °/s	
Non linearity		NI	±0.5 %FS	Ta=+25 °C
Cross axes		CS	±5 %	Ta=+25 °C
Current consumption		Iop1	0.9 mA Typ.	Not communicating
Stand-by current		Iop2	160 µA Typ.	
Sleep current		Iop3	3 µA Typ.	
Noise		Nd	0.003 (º/s)/√Hz	at 10Hz

Product Name (Standard form)

XV700 1 B B * *
① ②③④ ⑤ ⑥

①Model ②Detection axis (1:Z-axis) ③Package type(B: Ceramic 5032size)
④Output (B: SPI/I²C) ⑤Frequency ⑥Custom recognition(not necessary to specify)

External Dimensions (Unit:mm)

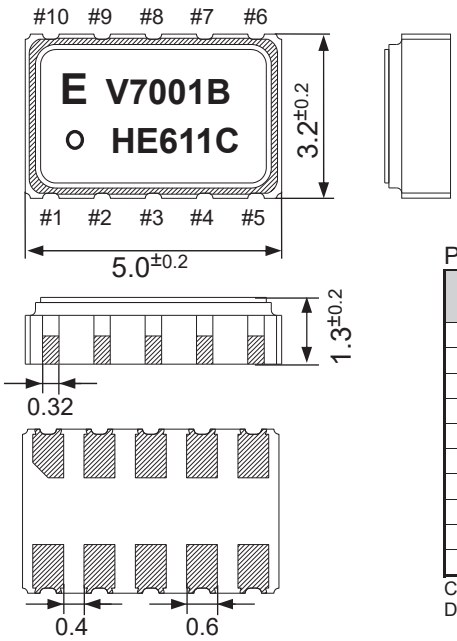

Pin map

Pin	Connection XV7001BB
1	MOSI/SDA
2	SS
3	VDDL
4	Reserved1
5	GND
6	VDDM
7	Reserved2
8	VDDI
9	MISO/SA0
10	SCLK/SCL

Connect "Reserved1" pin to GND.
Do not connect "Reserved2" pin externally.

Footprint (Recommended) (Unit:mm)

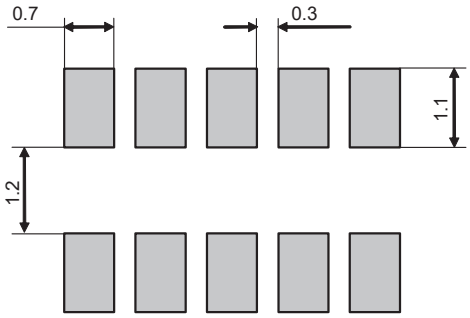

GYRO SENSOR

XV-3510CB

Product number
XV-3510CB:X2A000121xxxxxx

- Small Package size SMD(5.0 × 3.2 × 1.3 mm)
- Hermetic sealing provides excellent sustainable environmental capability
- High stability using vibration crystal

Recommended Application
- Detection picture stabilization of DVC and DSC
- Detection of moving with man machine interface

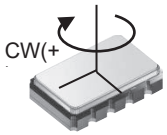

Specifications (characteristics)

Item		Symbol	Specifications XV-3510CB	Conditions / Remarks
Supply voltage		V_{DD}	3.0 V ±0.3 V	
Temperature range	Storage Temperature	T_{STG}	-40 °C to +85 °C	
	Operating Temperature	T_{OPR}	-20 °C to +80 °C	
Scale Factor		So	3.0 mV/(°/s)	
Bias		V_0	Vr ± 30 mV	Ta=+25 °C
Reference Voltage		Vr	1430 ± 20 mV	Ta=+25 °C
Rate Range		I	±300 °/s	
Non linearity		NL	±0.5 % FS	Ta=+25 °C
Phase Delay		ϕ20	9 deg.	at 20Hz phase delay angle
Current consumption		Iop	2.2 mA Typ.	V_O,Vr : Output No load condition

Product Name (Standard form)
XV-3510 CB * **.****** kHz
① ② ③ ④
①Model ②Package type ③Spec segment ④Frequency (not necessary to specify)

External Dimensions (Unit:mm)

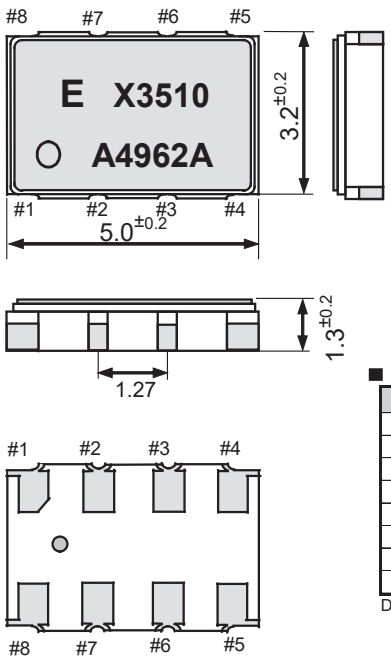

■ Pin map

Pin	Connection
1	N.C.
2	N.C.
3	N.C.
4	GND
5	V_{OUT}
6	V_{REF}
7	N.C.
8	V_{DD}

Do not connect "N.C." pins externally.

Footprint (Recommended) (Unit:mm)

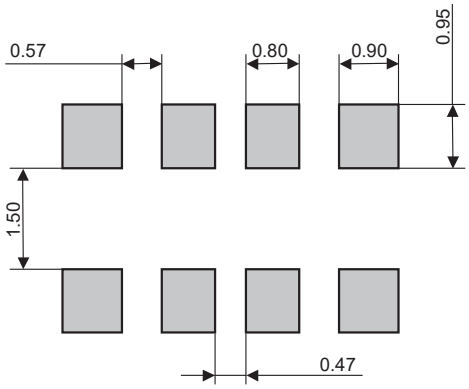

Automotive Solutions

► kHz Crystal Unit

***Please Contact us regarding available frequency other than 32.768 kHz.**

P	Model	Size [mm]	Nominal frequency range	Frequency Tolerance (+25 °C) [× 10^{-6}]	Motional resistance Max. [kΩ]	Load capacitance [pF]	Operating temperature [°C]	Frequency vs temperature characteristics (Turnover Temperature: +25 °C Typ.)
110	**FC-13A (AEC-Q200)**	3.2 x 1.5 x 0.9t	● 32.768 kHz	±20 ±30 ±50	70	9 12.5	-40 to +125	Parabolic coefficient (B): -0.04 × 10^{-6} / °C ^{2} Max. f_tem =B (Ti−θx) ^{2}
111	**MC-30A (AEC-Q200)**	8.0 x 3.8 x 2.54t	● 32.768 kHz	±20 ±50	50	12.5	-40 to +85	
			20 kHz 120 kHz	±50 ±100	55 to 12			

► kHz Crystal Oscillator

►SPXO

P	Model	Size [mm]	Nominal frequency range	Frequency Tolerance (+25 °C) [x 10^{-6}]	Operating temperature (T_use) [°C]	Supply voltage [V]	Current consumption Max. [μA] (V_{CC} = 3.3 V, No load, T_use)	Output load condition [pF]	Output control
112	**SG-3031CMA (AEC-Q100)**	3.2 × 1.5 × 0.9t	● 32.768 kHz	5 ± 23	-40 to +85	1.1 to 5.5	1.3	15	V_{IO}

►TCXO

P	Model	Size [mm]	Nominal frequency range	Frequency tolerance [x 10^{-6}] / Operating temperature (T_use) [°C]	Supply voltage [V]	Current consumption Max. [μA] (V_{CC} = 3.3 V, No load, T_use)	Output load condition [pF]	Output control
113	**TG-3541CEA (AEC-Q100)**	3.2 × 2.5 × 1.0t	● 32.768 kHz	±3.4 / -40 to +85 ±5.0 / -40 to +85 ±8.0 / +85 to +105	1.5 to 5.5	3.0	30	OE

►Real Time Clock Module

3.2 x 2.5 x 1.0t (CE package) Recommendation package

P	Model	Interface	Specifications								Functions					
			Operating temperature Ta [°C]		Frequency Tolerance [x 10^{-6}]				Backup current consumption [μA] 3.0V							
			Min.	Max.	+25 °C	-40 °C to +85 °C	-40 °C to +105 °C	-40 °C to +125 °C	Typ. (25 °C)	Max. (Ta = Max.)	Time Stamp	Power Switch	EVIN pin	User Memory	Timer	Others
114	RA8000CE (AEC-Q100)	I²C	-40	+125	-	±5.0	±8.0	±50.0	0.3	1.7	2	-	0 or 2	-	24 bit x 1 ch. to 32 years	Reset output with Delay, SOUT pin
116	RA4000CE (AEC-Q100)	SPI	-40	+125	-	±5.0	±8.0	±50.0	0.3	1.7	2	-	0 to 2	-	24 bit x 1 ch. to 32 years	Reset output with Delay, SOUT pin
118	RA8804CE (AEC-Q100)	I²C	-40	+105	-	±3.4 ±5.0	±8.0	-	0.35	1.5	1	-	1	-	16 bit x 1ch. to 7.5 years	SOUT pin
119	RA8900CE (AEC-Q200)	I²C	-40	+85	-		-	-	0.7	1.4	-	✓	-	-	12 bit x 1ch. to 2.8 days	Built-in Temp. Sensor

10.1 x 7.4 x 3.3t (SA package / SOP-14 pin)

P	Model	Interface	Specifications							Functions					
			Operating temperature Ta [°C]		Frequency Tolerance [x 10^{-6}]			Backup current consumption [μA] 3.0 V							
			Min.	Max.	+25 °C	-40 °C to +85 °C	-40 °C to +105 °C	Typ. (25 °C)	Max. (Ta = Max.)	Time Stamp	Power Switch	EVIN pin	User Memory	Timer	Others
Web site	RA8803SA (AEC-Q200)	I²C	-40	+85	-	±3.4 ±5.0	-	0.75	2.1	-	-	1	-	to 2.8 days	Time sync. with 1 PPS
Web site	RA4803SA (AEC-Q200)	SPI						0.75	2.1	-	-	1	-	to 2.8 days	Time sync. with 1 PPS
Web site	RA-8565SA (AEC-Q200)	I²C			5±23	-		1.0	1.6	-	-	-	-	to 255 min.	
Web site	RA-4565SA (AEC-Q200)	SPI						0.8	1.6	-	-	-	-	to 255 min.	

► MHz Crystal Unit

P	Model	Size [mm]	Nominal frequency range	Frequency tolerance (+25 °C) [x 10^{-6}]	Frequency vs. temperature characteristics [x10^{-6}] / Operating temperature [°C]	Motional resistance Max. [Ω]	Load Capacitance [pF]	Operating temperature [°C]
120	**FA2016AA (AEC-Q200)**	2.0 × 1.6 × 0.5t	16 MHz 54 MHz	±10	±20 / -40 to +85 ±50 / -40 to +125	200 (16 ≤ f < 18 MHz) 150 (18 ≤ f < 20 MHz) 100 (20 ≤ f < 24 MHz) 80 (24 ≤ f < 26 MHz) 60 (26 ≤ f ≤ 54 MHz)	6 to ∞	-40 to +125
121	**FA-238A (AEC-Q200)**	3.2 ×2.5 × 0.7t	12 MHz 50 MHz	±15	±30 / -40 to +85	120 (12 ≤ f ≤ 13 MHz) 80 (13 < f < 20 MHz) 60 (20 ≤ f < 25 MHz) 50 (25 ≤ f ≤ 50 MHz)	7 to ∞	-40 to +125

► MHz Crystal Unit (Built-in Thermistor)

P	Model	Size [mm]	Nominal frequency range	Frequency tolerance (+25 °C) [x 10^{-6}]	Frequency vs. temperature characteristics [x10^{-6}] / Operating temperature [°C]	Motional resistance Max. [Ω]	Load Capacitance [pF]	Operating temperature [°C]
122	**FA2016ASA (AEC-Q200)**	2.0 × 1.6 × 0.68t	● 38.4 MHz	±10	±12 / -30 to +85 ±30 / -40 to +105	50	6 to ∞	-40 to +105

*1 Please contact us about reference temperature.

►Fixed-Frequency SPXO

P	Model		Size [mm]	Nominal frequency range	Frequency Tolerance [x 10^{-6}]	Operating temperature [°C]	Supply voltage [V]	Current consumption Max. [mA]	Output load condition [pF]	Output control
123	**SG2016CAA (AEC-Q200)**		2.0 x 1.6 x 0.7t 2.5 x 2.0 x 0.8t	1 MHz 75 MHz 1.2 MHz (SG2016CAA)	±50, ±100 ±50, ±100 ±100, ±150	-40 to +85 -40 to +105 -40 to +125	1.6 to 2.2	2.9	15	$\overline{ST}$
							2.2 to 2.7	3.3		
	SG2520CAA (AEC-Q200)						2.7 to 3.6	3.5		
Web site	**SG-210S*BA (AEC-Q200)**	SEBA	2.5 x 2.0 x 0.8t	2 MHz 50 MHz	±50, ±100 ±50, ±100 ±50, ±100 ±100, ±150	-20 to +70 -40 to +85 -40 to +105 -40 to +125	1.6 to 2.2	2.0	15	$\overline{ST}$
		SDBA					2.2 to 3.0	3.0		
		SCBA					2.7 to 3.6	4.0		

►Programmable SPXO

P	Model	Size [mm]	Nominal frequency range	Frequency Tolerance [x 10^{-6}]	Operating temperature [°C]	Supply voltage [V]	Current consumption Max. [mA]	Output load condition [pF]	Output control
124	**SG-8101CGA (AEC-Q100)**	2.5 x 2.0 x 0.7t	0.67 MHz 170 MHz	±15 ±20 ±50 / ±100	-40 to +85 -40 to +105 -40 to +125	1.62 to 1.98	5.5	15	OE or $\overline{ST}$
						1.98 to 2.20	5.8		
						2.20 to 2.80	6.7		
						2.70 to 3.63	8.1		
126	**SG-9101CGA (AEC-Q100)**	2.5 x 2.0 x 0.7t	0.67 MHz 170 MHz	±0.25 to ±2.0 -0.5 to -4.0	-40 to +125	1.62 to 1.98	5.8		
						1.98 to 2.20	6.1		
						2.20 to 2.80	7.0		
						2.70 to 3.63	8.4		

► RF Transmitter Module

P	Model	Size (mm)	Feature	Operating temperature	Supply voltage	Current consumption (Max.)
128	**SR3225SAA (AEC-Q100)**	3.2×2.5×1.0 (t: Typ.)	UHF range wireless transmitter module. 300 ~ 400 MHz (0.25 kHz step) 600 ~ 930 MHz (0.49 kHz step) Modulation types: ASK / OOK / FSK SPI interface	-40 to +85 °C	1.8 V to 3.6V	16 mA

► Gyro sensor for automotive

P	Model	Size [mm]	Supply Voltage [V]	Interface Type	Bias	Rate Range [°/s]	Scale Factor [mV/(°/s)]	Non Linearity [%FS]	Operating Temperature [°C]	Recommended Application
131	**XV-9100CD (AEC-Q100)**	5.0×5.0×1.3t	4.75 to 5.25	Analog Voltage	0.5 × V_{DD} [V]	±100	0.004 × V_{DD}	± 0.5	-40 to +105	Electric Stability Control System, Rollover Protection System
	XV-9300CD (AEC-Q100)					±300	0.0012 × V_{DD}			
132	**XV-9100LV (AEC-Q100)**	7.0×6.8×3.3t				±100	0.004 × V_{DD}		-40 to +125	
	XV-9300LV (AEC-Q100)					±300	0.0012 × V_{DD}			
	XV-9100LP (AEC-Q100)	9.5×5.0×7.2t				±100	0.004 × V_{DD}			
	XV-9300LP (AEC-Q100)					±300	0.0012 × V_{DD}			
133	**XV4001KC (AEC-Q200)**	6.0×4.8×3.3t Inclined	3.0 to 3.6	Digital (I^2C-Bus)	0 [LSB] Typ. ± 2 [°/s]	±70	370 [LSB/(°/s)] ±1.5 [%]	± 0.5	-40 to +85	Car navigation system
	XV4001KD (AEC-Q200)			Digital (SPI-Bus)						
	XV4001BC (AEC-Q200)	5.0×3.2×1.3t		Digital (I^2C-Bus)						
	XV4001BD (AEC-Q200)			Digital (SPI-Bus)						

kHz RANGE CRYSTAL UNIT
For Automotive

For Automotive | Pb Free | RoHS Compliant

Product Number
X1A000091xxxx00

FC-13A

- Frequency range : 32.768 kHz
- External dimensions : 3.2 × 1.5 × 0.9 mm
- Overtone order : Fundamental
- Applications : Car audio, ECU sub clock, Car navigation system, Clock
- Conforms to AEC-Q200

Specifications (characteristics)

Item	Symbol	Specifications	Conditions / Remarks
Nominal frequency range	f_nom	32.768 kHz	
Storage temperature range	T_stg	-55 °C to +125 °C	Storage as single product.
Operating temperature range	T_use	-40 °C to +125 °C	
Level of drive	DL	0.5 μW (1.0 μW Max.)	Please contact us if you require 1.0 μW Max.
Frequency tolerance (standard)	f_tol	$\pm 20 \times 10^{-6}$, $\pm 30 \times 10^{-6}$, $\pm 50 \times 10^{-6}$	+25 °C, DL = 0.1 μW
Turnover temperature	Ti	+25 °C ±5 °C	
Parabolic coefficient	B	-0.04×10^{-6} / °C^2 Max.	
Load capacitance	CL	9 pF, 12.5 pF	Please specify
Motional resistance (ESR)	R1	70 kΩ Max.	
Motional capacitance	C1	3.2 fF Typ.	
Shunt capacitance	C0	0.9 pF Typ.	
Frequency aging	f_age	$\pm 3 \times 10^{-6}$ / year Max.	+25 °C, First year

Product name (Standard form): FC-13A ① 32.768000kHz ② 12.5 ③ +20.0-20.0 ④

①Model ②Frequency ③Load capacitance (pF) ④Frequency tolerance ($\times 10^{-6}$, +25 °C)

External dimensions (Unit:mm)

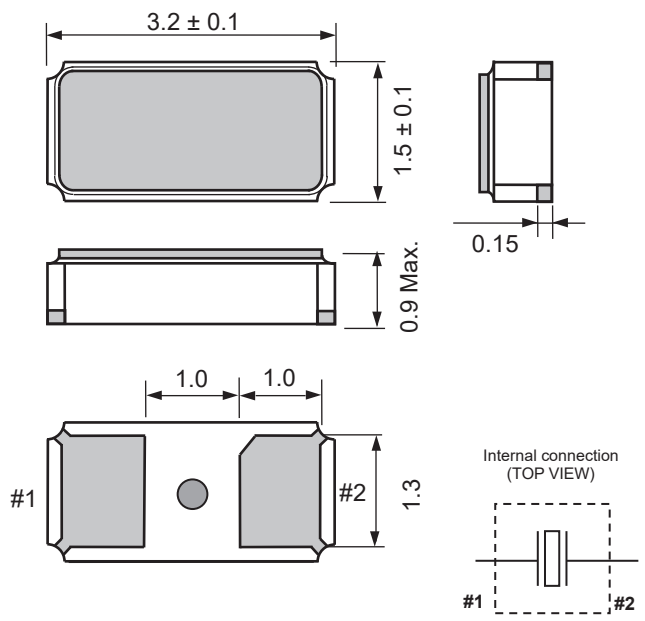

Footprint (Recommended) (Unit:mm)

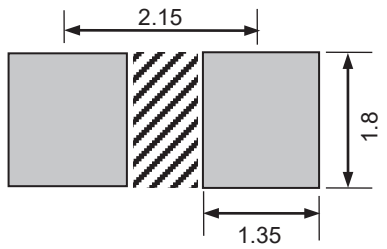

∗Do not design any circuit patterns in the shaded area.

kHz RANGE CRYSTAL UNIT
For Automotive

For Automotive

RoHS Compliant

Product Number
Q1xMC30A2xxxx00

MC-30A / MC-30A TYPE

- Frequency range : MC-30A··· 32.768 kHz
  : MC-30A TYPE··· 20 kHz to 120 kHz
- External dimensions : 8.0 × 3.8 × 2.54 mm
- Overtone order : Fundamental
- Applications : Car audio, ECU sub clock, Car navigation system, Clock
- Conforms to AEC-Q200

Specifications (characteristics)

Item	Symbol	Specifications		Conditions / Remarks
		MC-30A	MC-30A TYPE	
Nominal frequency range	f_nom	32.768 kHz	20 kHz to 120 kHz	Please contact us about available frequencies.
Storage temperature	T_stg	-55 °C to +125 °C		Storage as single product.
Operating temperature	T_use	-40 °C to +85 °C		
Level of drive	DL	1.0 μW Max.		
Frequency tolerance (standard)	f_tol	$\pm 20 \times 10^{-6}$, $\pm 50 \times 10^{-6}$	$\pm 50 \times 10^{-6}$, $\pm 100 \times 10^{-6}$	+25 °C, DL=0.1 μW
Turnover temperature	Ti	+25 °C ±5 °C		
Parabolic coefficient	B	-0.04×10^{-6} / °C² Max.		
Load capacitance	CL	6 pF to ∞ (standard :12.5 pF)		Please specify
Motional resistance (ESR)	R1	50 kΩ Max.	As per table below	
Motional capacitance	C1	1.8 fF Typ.	4.0 fF to 0.6 fF	
Shunt capacitance	C0	0.9 pF Typ.	2.0 pF to 0.6 pF	
Frequency aging	f_age	$\pm 3 \times 10^{-6}$ / year Max.	$\pm 5 \times 10^{-6}$ / year Max.	+25 °C, First year

MC-30A TYPE Motional resistance (ESR)

Frequency	20 kHz≤f_nom<31.2 kHz	31.2 kHz≤f_nom<40 kHz	40 kHz≤f_nom<90 kHz	90 kHz≤f_nom≤120 kHz
Motional resistance	55 kΩ Max.	35 kΩ Max.	20 kΩ Max.	12 kΩ Max.

Product name (Standard form)

MC-30A	32.768000kHz	12.5	+20.0-20.0
①	②	③	④

①Model ②Frequency ③Load capacitance(pF) ④Frequency tolerance(× 10^{-6}, +25 °C)

External dimensions (Unit:mm)

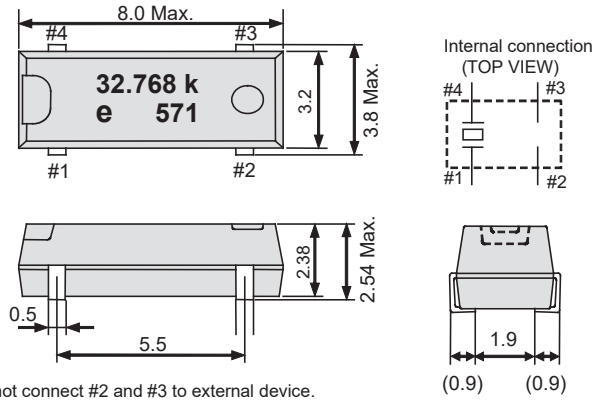

Do not connect #2 and #3 to external device.

The metal case inside of the molding compound may be exposed on the top or bottom of this product.
This purely cosmetic and does not have any effect on quality, reliability or electrical specs.

Footprint (Recommended) (Unit:mm)

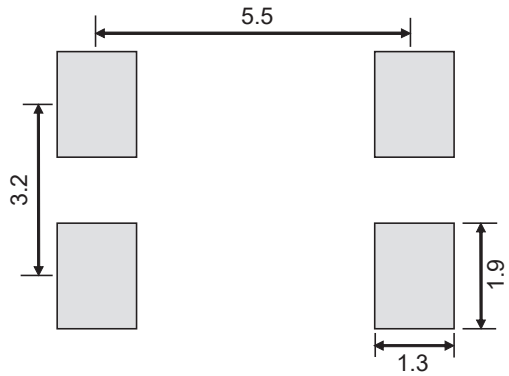

CRYSTAL OSCILLATOR (SPXO)

FOR AUTOMOTIVE

32.768 kHz

For Automotive

Pb Free

RoHS Compliant

Product Number
SG-3031CMA : X1B000401A00116

SG-3031CMA

- Built-in 32.768 kHz crystal unit allows adjustment-free efficient operation.
- Operation temperature -40 °C to +105 °C
- Use of CMOS IC enables reduction of current consumption.
- V_{IO} controls swing amplitude.
- Conforms to AEC-Q100

- Applications
  Infotainment and communication devices, Body (ECU*)
  Clock for Time counting and Sleep function. *ECU: Electronic control unit

Specifications (characteristics)

Item	Symbol	Specifications	Remarks
Output frequency range	fo	32.768 kHz	
Supply voltage	V_{CC}	1.2 V to 5.5 V	V_{CC} <1.5 V, V_{IO} = V_{CC}
Interface power supply voltage	V_{IO}	1.2 V to 5.5 V	
Storage temperature range	T_stg	-55 °C to +125 °C	Store as bare product after unpacking
Operating temperature range	T_use	-40 °C to +105 °C	
Frequency tolerance	f_tol	+5 ± 23 × 10^{-6}	+25 °C, V_{CC} = 3.3 V
Frequency temperature coefficient	fo-Tc	-120 × 10^{-6} to +10 × 10^{-6}	-20 °C to +70 °C (V_{CC} = 3.3 V +25 °C is reference)
		-240 × 10^{-6} to +10 × 10^{-6}	-40 °C to +85 °C (V_{CC} = 3.3 V +25 °C is reference)
		-420 × 10^{-6} to +10 × 10^{-6}	-40 °C to +105 °C (V_{CC} = 3.3 V +25 °C is reference)
Frequency voltage coefficient	fo-V_{CC}	±1 × 10^{-6} / V Max.	V_{CC} = 1.5 V to 5.5 V
		±5 × 10^{-6} / V Max.	V_{CC} = 1.2 V to 1.5 V
Current consumption (V_{CC} Pin)	I_{CC}	0.30 μA Typ. / 0.65 μA Max.	V_{CC} = 1.2 V to 5.5 V
Current consumption (V_{CC}+V_{IO} Pin)	I_{CC}+I_{IO}	0.38 μA Typ.	V_{CC} = V_{IO} = 1.2 V, No load condition
		0.65 μA Typ. / 1.3 μA Max. (+105 °C)	V_{CC} = V_{IO} = 3.3 V, No load condition
Symmetry	SYM	45 % to 55 %	1/2V_{CC}(V_{IO}) level, 1.5 V to 5.5 V
		40 % to 60 %	1/2V_{CC} (V_{IO}) level, V_{CC} < 1.5 V
Output voltage	V_{OH} / V_{OL}	V_{IO} - 0.4V Min. / 0.4V Max.	I_{OH} = -0.4mA / I_{OL} = 0.4mA, V_{IO} = 1.5 V to 5.5 V
		V_{IO} - 0.2V Min. / 0.2V Max.	I_{OH} = -0.1mA / I_{OL} = 0.1mA, V_{IO} = 1.2 V to 1.5 V
Output load condition (CMOS)	L_CMOS	15 pF Max.	CMOS load
Rise time / Fall time	tr/tf	200 ns Max.	20 % V_{IO} to 80 % V_{IO} level, V_{IO} = 1.2 V to 5.5 V
		100 ns Max.	20 % V_{IO} to 80 % V_{IO} level, V_{IO} = 1.8 V to 5.5 V
Start-up time	t_str	0.15 s Typ. / 0.45 s Max.	V_{CC} = 1.5 V to 5.5 V
		1.0 s Max.	V_{CC} = 1.2 V to 1.5 V
Frequency aging	f_age	±5 × 10^{-6} / year Max.	+25 °C, V_{CC} = 3.3 V, First year

Unless otherwise stated, characteristics (specifications) shown in the above table are based on the rated operating temperature and voltage condition.

Block diagram

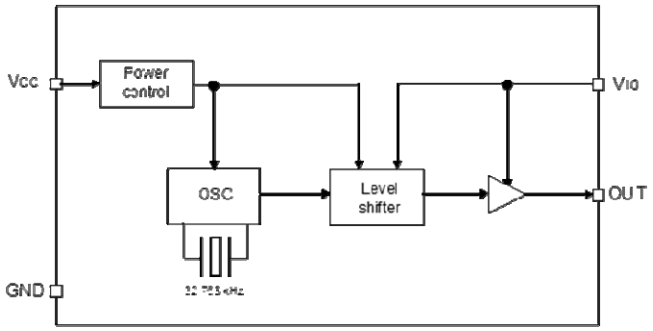

V_{IO} is a power supply pin for OUT output and can also be used as an OE pin. Set V_{IO} to 0 V when setting Disable.
Vcc is a power supply pin for operating the 32.768 kHz oscillation. Power consumption can be minimized by minimizing the applied voltage of both power supplies. However, when V_{CC} < 1.5 V, V_{IO} = V_{CC}.

External dimension (Unit:mm)

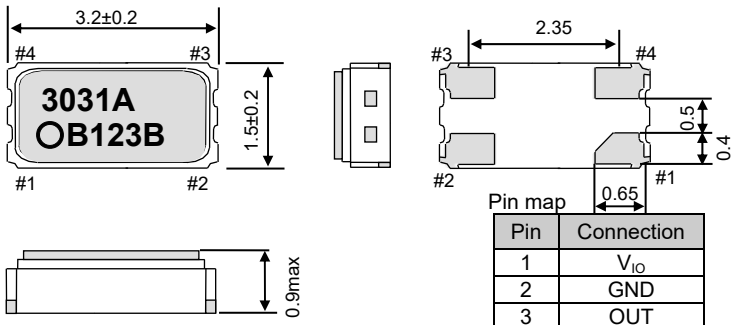

Pin map

Pin	Connection
1	V_{IO}
2	GND
3	OUT
4	V_{CC}

Footprint(rference) (Unit:mm)

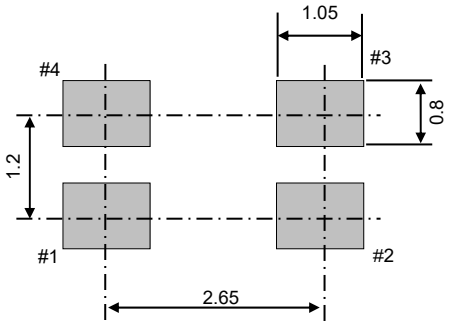

To maintain stable operation, provide a 0.01 uF to 0.1 uF by-pass capacitor at a location as near as possible to the power source terminal of the crystal product (between V_{CC} – GND, V_{IO}-GND).

TCXO
For Automotive

TG-3541CEA

Product Number
TG-3541CEA XA : X1B000361A00100
TG-3541CEA XB : X1B000361A00200

- Output frequency : 32.768 kHz
- Built-in 32.768 kHz-DTCXO
- Supply voltage : 1.5 V to 5.5 V
- Frequency / Temperature Characteristics
  - XA ± 1.9 x 10^{-6} (0 ºC to +50 ºC)
    ± 3.4 x 10^{-6} (-40 ºC to +85 ºC)
    ± 8.0 x 10^{-6} (+85 ºC to +105 ºC)
  - XB ± 3.8 x 10^{-6} (0 ºC to +50 ºC)
    ± 5.0 x 10^{-6} (-40 ºC to +85 ºC)
    ± 8.0 x 10^{-6} (+85 ºC to +105 ºC)
- Conforms to AEC-Q100

Specifications (characteristics)

Item	Symbol	Specifications		Conditions
Output frequency range	fo	32.768 kHz		
Supply voltage	V_{CC}	1.5 V to 5.5 V		
Storage temperature	T_stg	-55 °C to +125 °C		
Operating temperature	T_use	-40 °C to +105 °C		
Frequency / Temperature Characteristics	fo_Tc	XA	±1.9 × 10^{-6}	Ta = 0 °C ~ +50 °C
			±3.4 × 10^{-6}	Ta = -40 °C ~ +85 °C
			±8.0 × 10^{-6}	Ta = +85 °C ~ +105 °C
		XB	±3.8 × 10^{-6}	Ta = 0 °C ~ +50 °C
			±5.0 × 10^{-6}	Ta = -40 °C ~ +85 °C
			±8.0 × 10^{-6}	Ta = +85 °C ~ +105 °C
Current consumption	Icc	1.0 μA Typ./3.0 μA Max.		No load condition, Vcc = 3.0 V
Disable current	I_dis	1.5 μA Max.		OE=GND, Vcc = 3.0 V
Symmetry	SYM	40 % to 60 %		50 % Vcc level
Output voltage	V_{OH}	80 % Vcc Min.		IOH=-0.5 mA, Vcc=3.0 V
	V_{OL}	20% Vcc Max.		IOL=0.5 mA, Vcc=3.0 V
Output load condition(CMOS)	L_CMOS	30 pF Max.		
Start-up time	t_str	1 s Max.		Ta= +25 °C , Vcc=1.5 V to 5.5 V
Frequency aging	f_aging	±3 × 10^{-6}		Ta= +25°C, Vcc=3.0 V, first year

External dimensions (Unit:mm)

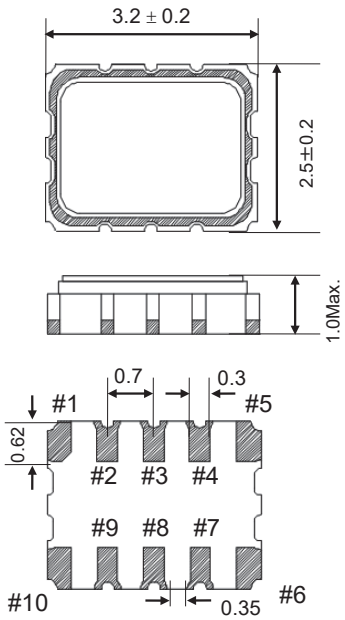

Pin	Connection
1	OE
2	Vcc
3	Vcc
4	OUT
5	GND
6	N.C.
7	GND
8	GND
9	GND
10	N.C.

∗OE is active HIGH input,
Do not leave floating.
∗N.C. must be left open.
∗Connect all GND / V_{CC}
to GND / V_{CC}.

Frequency temperature characteristics

■ 32.768 kHz-DTCXO Frequency temperature characteristics (Example)

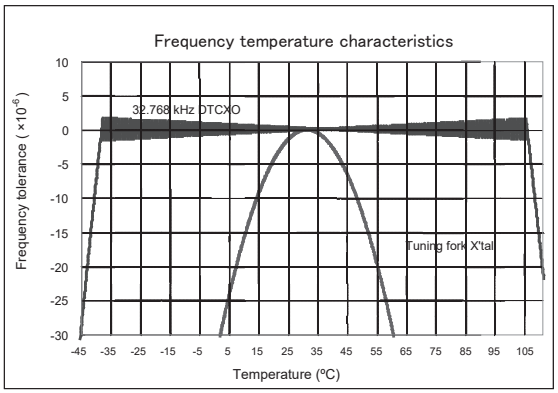

Product Number (2,000 pcs / Reel)
RA8000CE YB A0 : X1B000501A00115
RA8000CE YB B8 : X1B000501A00915
RA8000CE YB C0 : X1B000501A01015

REAL TIME CLOCK MODULE (I^2C)

For Automotive, Built-in 32.768 kHz DTCXO,
High Stability, +125 ºC

RA8000CE

- Built in frequency adjusted 32.768 kHz crystal unit and DTCXO
- Interface Type : I^2C-Bus
- Time stamp function : 2 times stamped from year to second
- Reset functions with a delay : Detect a main power supply and remove the reset
- Interrupt output : Wake up every minute or every second
- Alarm interruption : Day, date, hour, minute, second
- Auto repeat wakeup timer interruption
- Self-monitoring interruption : Crystal oscillation stop, V_{DD} low
- Conforms to AEC-Q100

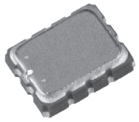

RA8000CE
(3.2 × 2.5 mm, t = 1.0 mm Max.)

Block diagram

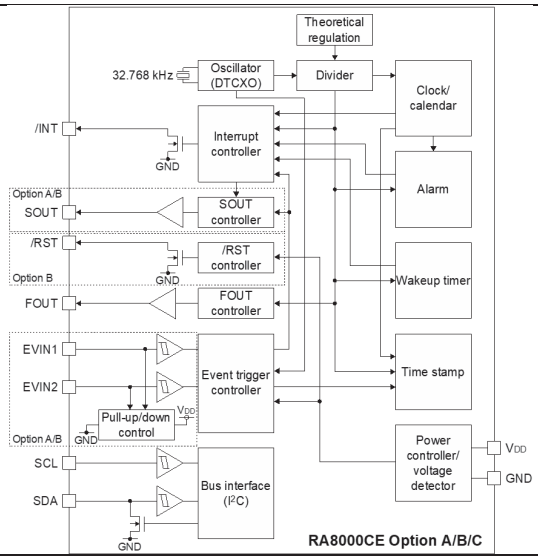

Overview

- Interface type
  I^2C-Bus interface Fast-Mode 400 kHz
- High stability
  YB : ±5.0 x 10^{-6} / -40 ºC to +85 ºC (Monthly rate: ±13.2 seconds)
  : ±8.0 x 10^{-6} / +85 ºC to +105 ºC (Monthly rate: ±21 seconds)
  : ±50.0 x 10^{-6} / +105 ºC to +125 ºC (Monthly rate: ±132 seconds)
- Clock output function
  Output frequency is selectable from 32.768 kHz, 1024 Hz, 1 Hz
- Wakeup timer function
  Can generate an interrupt in 976.56 µs to 32-year cycle.
  Can be used as a time integration meter.
  Can be used as a watchdog timer.
- Time stamp function
  Record data: 1/1024 seconds to 1 second, seconds, minutes, hours, days, months, years.
  Number of recordable events: 2 events
  Trigger source: External event (EVIN) input, voltage drop/oscillation stop status detected, command input from the host.
  EVIN pin has function of chattering-cancel.
- Reset function with a delay
  Can output a reset signal when a V_{DD} voltage drop status is detected.
- Status output (SOUT)
  Can output the selected internal flag (interrupt flag, voltage drop detection flag) status.

Pin Function

Signal Name	I / O	Function
EVIN1, 2	Input	External event input pins Pull-up and pull-down is configurable by the resisters
SCL	Input	Serial clock input pin
SDA	Input / Output	Serial data input and output pin
FOUT	Output	Frequency output pin (CMOS). 32.768 kHz (default), 1024 Hz or 1 Hz clock output is selectable. This pin can be switched to the wakeup timer interrupt output (CMOS)
/INT	Output	Interrupt output pin (N-ch. open drain). The wakeup timer, time update, alarm, and/or event detection interrupt signals can be selected to output from this pin. When two or more signals are selected, they are NORed before being output.
/RST	Output	Reset output pin (N-ch. open drain)
SOUT	Output	Status output pin
V_{DD}	-	Power-supply pin
GND	-	Ground pin

Terminal connection / External dimensions (Unit: mm)

RA8000CE

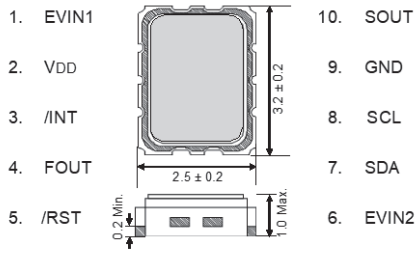

*The above diagram is the terminal layout for Option B.
For other options, please refer to the Pin Option section.

Specifications (characteristics)

∗ Refer to application manual for details

■ Electrical Characteristics

Item	Symbol	Conditions			Min.	Typ.	Max.	Unit
Operating voltage	V_{DD}	-			1.6	3.0	5.5	V
Temp. compensated Voltage	V_{TEM}	-			1.6	3.0	5.5	V
Clock supply voltage	V_{CLK}	-			1.3	3.0	5.5	V
Operating temperature	T_a	-			-40	+25	+125	ºC
Frequency tolerance	Δ f / f	YB	T_a = -40 ºC to +85 ºC			±5.0		x 10^{-6}
			T_a = +85 ºC to +105 ºC			±8.0		
			T_a = +105 ºC to +125 ºC			±50.0		
Current consumption	I_{DD1}	/INT = Hi-Z, FOUT: Output OFF (Hi-Z), Temp. Compensation interval 2.0 s, SCL = SDA = H	No /RST pin	V_{DD} = 5 V	-	0.35	1.8	µA
	I_{DD2}			V_{DD} = 3 V	-	0.3	1.7	
	I_{DD11}		With /RST pin	V_{DD} = 5 V	-	1.5	3.7	
	I_{DD12}			V_{DD} = 2 V	-	0.6	2.25	

■32.768 kHz-DTCXO Frequency temperature characteristics (Example)

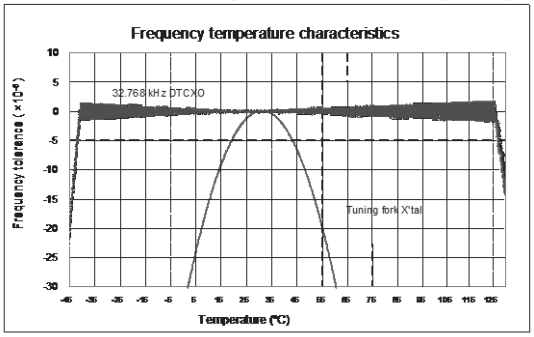

Pin Option

Pin No.	Pin name		
	Option A	Option B	Option C
1	EVIN1		N.C.
2	V_{DD}		
3	/INT		
4	FOUT		
5	N.C.	/RST	N.C.
6	EVIN2		N.C.
7	SDA		
8	SCL		
9	GND		
10	SOUT		N.C.

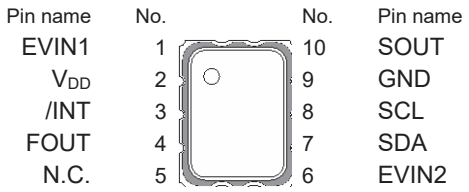

Option A

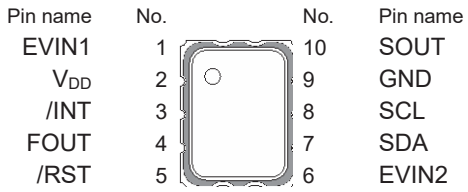

Option B

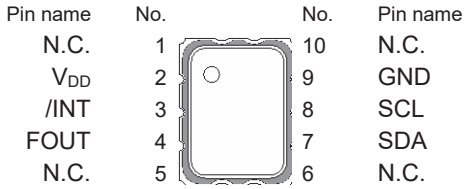

Option C

Product name

RA8000CE YB A 0
① ② ③④

① Model CE type package 3.2 x 2.5 x 1.0 mm
② Frequency tolerance
YB: ±5.0 x 10^{-6} / -40 ºC to +85 ºC (Monthly rate: ±13.2 seconds)
±8.0 x 10^{-6} / +85 ºC to +105 ºC (Monthly rate: ±21 seconds)
±50.0 x 10^{-6} / +105 ºC to +125 ºC (Monthly rate: ±132 seconds)
③ Pin Option
A: Option A
B: Option B
C: Option C
④ Reset output function
0: No /RST pin
8: With /RST pin (V_{DD} drop detection voltage: +2.4 V Typ.)

REAL TIME CLOCK MODULE (SPI)

For Automotive, Built-in 32.768 kHz DTCXO,
High Stability, +125 ºC

RA4000CE

Product Number (2,000 pcs / Reel)
RA4000CE YB A0 : X1B000491A00115
RA4000CE YB B8 : X1B000491A00915
RA4000CE YB C0 : X1B000491A01015
RA4000CE YB D0 : X1B000491A01115
RA4000CE YB E8 : X1B000491A01915

- Built in frequency adjusted 32.768 kHz crystal unit and DTCXO
- Interface Type : 3 wire / 4 wire SPI-Bus
- Time stamp function : 2 time stamps from year to second
- Reset functions with a delay : Output a reset signal when a V_{DD} voltage drop status is detected.
- Interrupt output : Wake up every minute or every second
- Alarm interruption : Day, date, hour, minute, second
- Auto repeat wakeup timer interruption
- Self-monitoring interruption : Crystal oscillation stop, V_{DD} low
- Conforms to AEC-Q100

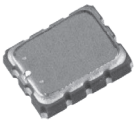

RA4000CE
(3.2 × 2.5 mm, t = 1.0 mm Max.)

Block diagram

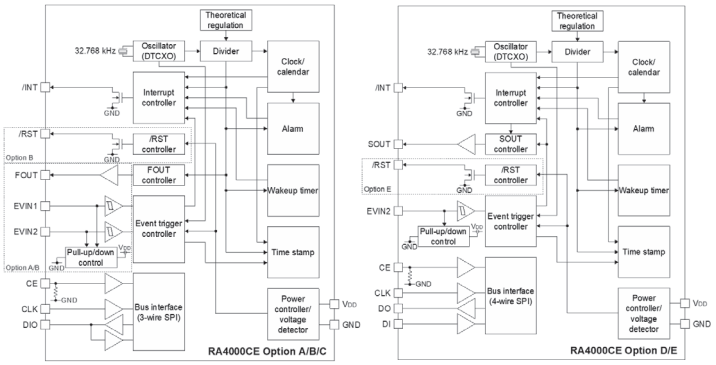

Overview

- Interface type
  3 wire / 4 wire SPI-Bus
- High stability
  ± 5.0 x 10^{-6} / -40 ºC to +85 ºC (Monthly rate: ±13.2 seconds)
  ± 8.0 x 10^{-6} / +85 ºC to +105 ºC (Monthly rate: ±21 seconds)
  ± 50.0 x 10^{-6} / +105 ºC to +125 ºC (Monthly rate: ±132 seconds)
- Clock output function
  Selectable from 32.768 kHz, 1024 Hz and 1 Hz outputs
- Wakeup timer function
  Selectable from 976.56 µs to 32 years cycle
  Can be used as a time integration meter
  Can be used like a watchdog timer
- Time stamp function
  Record data: 1/1024 seconds to 1 second, seconds, minutes, hours, days, months, years
  Number of recordable events: 2 events
  Trigger source: External event (EVIN) input, voltage drop/oscillation stop status detected, command input from the host
  EVIN pin has function of chattering-cancel
- Reset function with a delay
  Can output a reset signal when a V_{DD} voltage drop status is detected
- Status output (SOUT)
  Can output the selected internal flag (interrupt flag, voltage drop detection flag) status.

Pin Function

Signal Name	I / O	Function
EVIN1, 2	Input	External event input pins Pull-up and pull-down is configurable by the resisters
CE	Input	Slave select input pin A pull-down resistor (Typ. 300 kΩ) is included
CLK	Input	Serial clock input pin
DI	Input	Serial data input pin (4 wire)
DO	Output	Serial data Output pin (4 wire)
DIO	Input / Output	Serial data input/output pin (3 wire)
FOUT	Output	Frequency output pin (CMOS). 32.768 kHz (default), 1024 Hz or 1 Hz clock output is selectable. This pin can be switched to the wakeup timer interrupt output (CMOS)
/INT	Output	Interrupt output pin (N-ch. open drain). The wakeup timer, time update, alarm, and/or event detection interrupt signals can be selected to output from this pin. When two or more signals are selected, they are NORed before being output.
/RST	Output	Reset output pin (N-ch. open drain)
SOUT	Output	Status output pin
V_{DD}	-	Power-supply pin
GND	-	Ground pin

Terminal connection / External dimensions (Unit: mm)

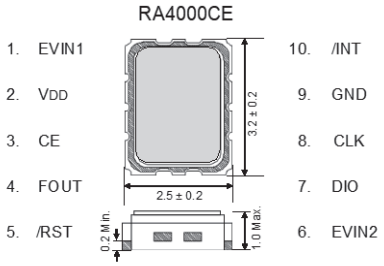

*The above diagram is the terminal layout for Option B.
For other options, please refer to the Pin Option section.

Specifications (characteristics)

∗ Refer to application manual for details

■ Electrical Characteristics

Item	Symbol	Conditions			Min.	Typ.	Max.	Unit
Operating voltage	V_{DD}	-			1.6	3.0	5.5	V
Temp. compensated Voltage	V_{TEM}	-			1.6	3.0	5.5	V
Clock supply voltage	V_{CLK}	-			1.3	3.0	5.5	V
Operating temperature	T_a	-			-40	+25	+125	ºC
Frequency tolerance	Δ f / f	YB	T_a = -40 ºC to +85 ºC			±5.0		x 10^{-6}
			T_a = +85 ºC to +105 ºC			±8.0		
			T_a = +105 ºC to +125 ºC			±50.0		
Current consumption	I_{DD1}	/INT = Hi-Z, FOUT: Output OFF (Hi-Z), Temp. Compensation interval 2.0 s, CE = L	No /RST pin	V_{DD} = 5 V	-	0.35	1.8	µA
	I_{DD2}			V_{DD} = 3 V	-	0.3	1.7	
	I_{DD11}		With /RST pin	V_{DD} = 5 V	-	1.5	3.7	
	I_{DD12}			V_{DD} = 2 V	-	0.6	2.25	

■ 32.768 kHz-DTCXO Frequency temperature characteristics (Example)

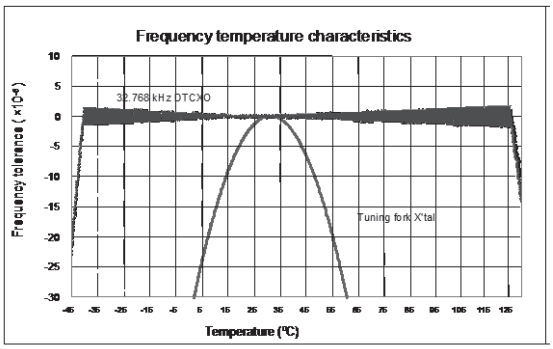

Pin Option

Pin No.	Pin name				
	Option A	Option B	Option C	Option D	Option E
	3 wire			4 wire	
1	EVIN1		N.C.	DI	
2	VDD				
3	CE				
4	FOUT		/INT		
5	N.C.	/RST	N.C.		/RST
6	EVIN2		N.C.	EVIN2	
7	DIO			DO	
8	CLK				
9	GND				
10	/INT		N.C.	SOUT	

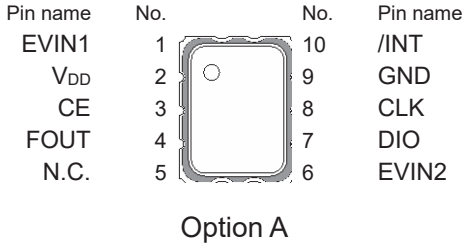

Option A

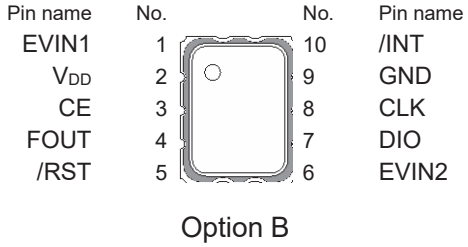

Option B

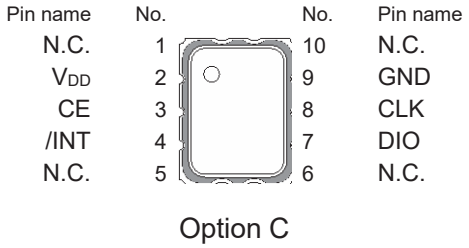

Option C

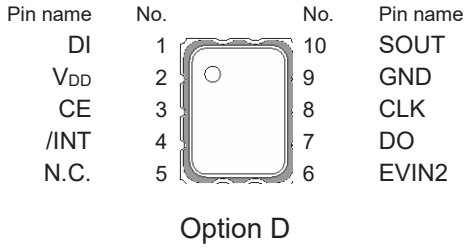

Option D

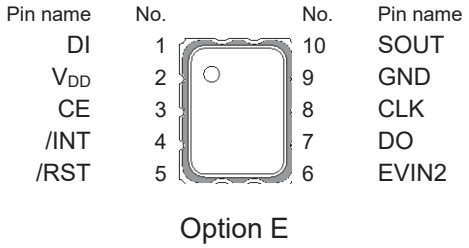

Option E

Product name

RA4000CE YB A 0
① ② ③④

① Model CE type package 3.2 x 2.5 x 1.0 mm
② Frequency tolerance
YB: ±5.0 x 10^{-6} / -40 ºC to +85 ºC (Monthly rate: ±13.2 seconds)
±8.0 x 10^{-6} / +85 ºC to +105 ºC (Monthly rate: ±21 seconds)
±50.0 x 10^{-6} / +105 ºC to +125 ºC (Monthly rate: ±132 seconds)
③ Pin Option
A: Option A
B: Option B
C: Option C
D: Option D
E: Option E
④ Reset output function
0: No /RST pin
8: With /RST pin (VDD drop detection voltage: +2.4 V Typ.)

REAL TIME CLOCK MODULE (I^2C-Bus)

For Automotive
Built-in 32.768 kHz DTCXO, High Stability

Product Number (2,000 pcs / Reel)
RA8804CE XA: X1B000381A00100
RA8804CE XB: X1B000381A00200

RA8804CE

- Built in frequency adjusted 32.768 kHz crystal unit and DTCXO
- Interface Type : I^2C-Bus
- Selectable clock output : 32.768 kHz, 1024 Hz, 1 Hz
- Time stamp function : 1 time stamped from year to second
- Interrupt output : Wake up every minute or every second
- Alarm interruption : Day, date, hour, minute
- Auto repeat wakeup timer interruption
- Self-monitoring interruption : Crystal oscillation stop, V_{BAT} low, V_{DD} low
- SOUT pin outputs that selected flag bit value
- Conforms to AEC-Q100

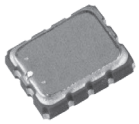

RA8804CE
(3.2 × 2.5 mm, t = 1.0 mm Max.)

Block diagram

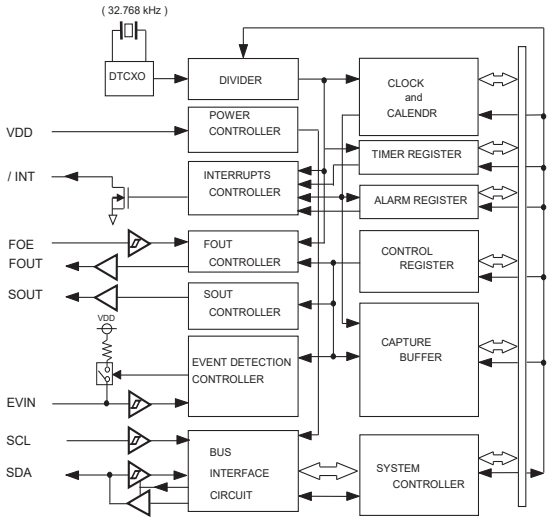

Overview

- Interface type
  I^2C-Bus interface Fast-Mode 400 kHz
- High stability
  XA: ± 3.4 x 10^{-6} / -40 ºC to +85 ºC (equivalent to ±9 s of mo. deviation)
  ± 8.0 x 10^{-6} / +85 ºC to +105 ºC (equivalent to ±21 s of mo. deviation)
  XB: ± 5.0 x 10^{-6} / -40 ºC to +85 ºC (equivalent to ±13 s of mo. deviation)
  ± 8.0 x 10^{-6} / +85 ºC to +105 ºC (equivalent to ±21 s of mo. deviation)
- Clock output function
  Output frequency is selectable from 32.768 kHz, 1024 Hz, 1 Hz
- Wakeup timer function
  Selectable from 244 µs to 32 years (24 bit x 1 ch.)
  Timer source clock selectable from 1/60 Hz, 1 Hz, 64 Hz, 4096 Hz
  Auto release after interrupt output from /INT pin at timer completes
  This operation is auto repeat with a selected cycle, it can be used like a watchdog timer
- Time stamp function
  1 time stamped from year to second
  The time stamp trigger inputs from EVIN pin, self-monitoring and I^2C software command
  EVIN pin has function of chattering-cancel
- Alarm function
  It is possible program from day to minute
- Internal state output function
  SOUT pin outputs selected flag-bit value or specified value (H or L)

Pin Function

Signal Name	I / O	Function
SOUT	Output	Internal state output pin
SCL	Input	Serial clock input pin
FOUT	Output	Frequency output pin (CMOS) (frequency selection: 32.768 kHz, 1024 Hz, 1 Hz)
EVIN	Input	Event input pin
V_{DD}	-	Power-supply pin
FOE	Input	The FOUT output control pin
/INT	Output	Interrupts output by Alarm and Timer events (N-ch. open drain)
GND	-	Ground pin
T2	-	Test pin in the factory (Do not connect externally)
SDA	Input / Output	Serial data input and output pin.

Terminal connection / External dimensions (Unit: mm)

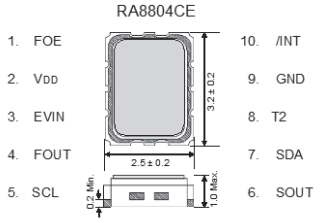

Specifications (characteristics)

∗ Refer to application manual for details

■ Electrical Characteristics

Item	Symbol	Conditions			Min.	Typ.	Max.	Unit
Operating voltage	V_{DD}	-			1.6	3.0	5.5	V
Temp. compensated Voltage	V_{TEM}	-			1.5	3.0	5.5	V
Clock supply voltage	V_{CLK}	-			1.5	3.0	5.5	V
Operating temperature	T_a	-			-40	+25	+105	ºC
Stability	Δ f / f	XA	T_a = -40 ºC to +85 ºC		±3.4			x 10^{-6}
			T_a = +85 ºC to +105 ºC		±8.0			
		XB	T_a = -40 ºC to +85 ºC		±5.0			
			T_a = +85 ºC to +105 ºC		±8.0			
Current consumption (1)	I_{DD1}	fSCL = 0 Hz, /INT = V_{DD}, FOE = GND, FOUT: OFF, Temp. Compensation interval 2.0 s		V_{DD} = 5 V	-	0.4	1.6	µA
Current consumption (2)	I_{DD2}			V_{DD} = 3 V	-	0.35	1.5	

■ 32.768 kHz DTCXO Frequency temperature characteristics (Example)

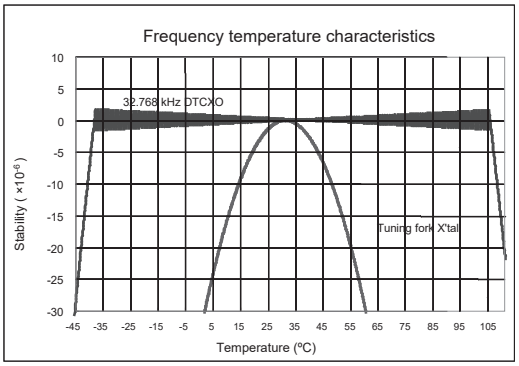

REAL TIME CLOCK MODULE (I^2C-Bus)

For Automotive, Power switching,
Built-in 32.768 kHz DTCXO, High Stability

For Automotive | Pb Free | RoHS Compliant

Product Number (2,000 pcs / Reel)
RA8900CE UA: X1B000271A00400
RA8900CE UB: X1B000271A00500

RA8900CE

- Built-in frequency adjusted 32.768 kHz crystal unit and DTCXO
- Interface Type : I^2C-Bus
- Interface voltage range : 2.5 V to 5.5 V
- Temp. compensated voltage range : 2.0 V to 5.5 V
- Timekeeping voltage range : 1.6 V to 5.5 V
- Auto power switching function : Automatically switches to backup power supply by monitoring the V_{DD} voltage
- Interrupt output : Wake up every minute or every second
- Alarm interruption : Day, date, hour, minute
- Auto repeat wakeup timer interruption
- Conforms to AEC-Q200

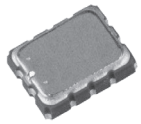

RA8900CE
(3.2 x 2.5 mm, t = 1.0 mm Max.)

Block diagram

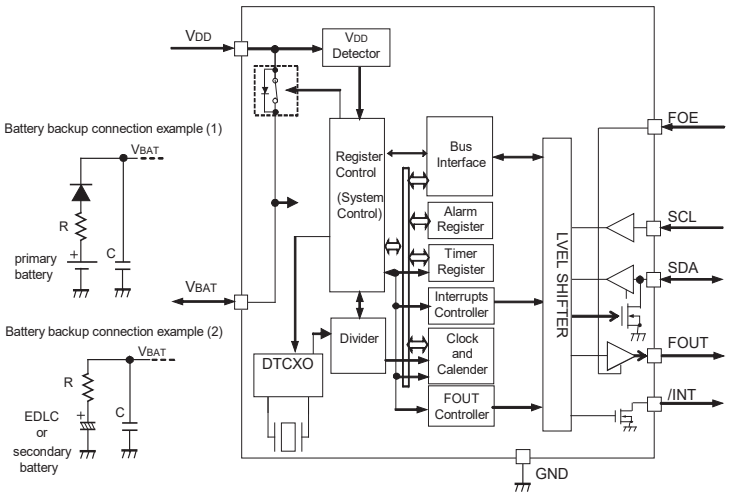

Overview

- Interface type
  I^2C-Bus interface Fast-Mode 400 kHz
- High stability
  UA: ± 3.4 x 10^{-6} / -40 ºC to +85 ºC (equiv. to ±9 s of mo. deviation)
  UB: ± 5.0 x 10^{-6} / -40 ºC to +85 ºC (equiv. to ±13 s of mo. deviation)
- Auto power switch function
  The V_{DD} voltage is monitored and it switches to the backup power supply by the automatic operation
  Backup power supply switching voltage 1.9 V Min.
- Clock output function
  Output frequency is selectable from 32.768 kHz, 1024 Hz, 1 Hz
- Wakeup timer function
  Selectable from 244 µs to 2.8 days (12 bit x 1 ch.)
  Timer source clock selectable from 1/60 Hz, 1 Hz, 64 Hz, 4096 Hz
  Auto release after interrupt output from /INT pin at timer completes
  This operation is auto repeat with a selected cycle, it can be used like a watchdog timer
- Alarm function
  It is possible program from day to minute
- Temp. sensor function
  Available readout temperature data from embedded temp sensor

Pin Function

Signal Name	I / O	Function
T1	-	Test pin in the factory (Do not connect externally)
SCL	Input	Serial clock input pin
FOUT	Output	Frequency output pin (CMOS) (frequency selection: 32.768 kHz, 1024 Hz, 1 Hz)
V_{BAT}	-	This is a power supply pin for backup battery Connect an EDLC, a secondary battery, a primary battery In the backup voltage range, supplied to IC, from this pin
V_{DD}	-	Power-supply pin
FOE	Input	The FOUT output control pin
/INT	Output	Interrupt output (N-ch. open drain).
GND	-	Ground pin
T2	-	Test pin in the factory (Do not connect externally)
SDA	Input / Output	Serial data input and output pin

Terminal connection / External dimensions (Unit: mm)

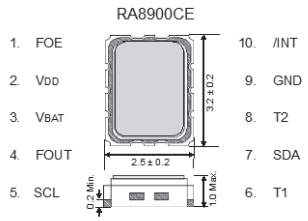

Specifications (characteristics)

∗ Refer to application manual for details

■ Electrical Characteristics

Item	Symbol	Conditions			Min.	Typ.	Max.	Unit
Operating voltage	V_{DD}	-			2.5	3.0	5.5	V
Temp. compensated Voltage	V_{TEM}	-			2.0	3.0	5.5	V
Clock supply voltage	V_{CLK}	-			1.6	3.0	5.5	V
V_{DD} detect voltage (3)	V_{DET3}	-			2.3	2.4	2.5	V
Operating temperature	T_a	-			-40	+25	+85 *1	ºC
Stability	Δ f / f	UA	T_a = -40 ºC to +85 ºC		±3.4			x 10^{-6}
		UB	T_a = -40 ºC to +85 ºC		±5.0			
		UC	T_a = -30 ºC to +70 ºC					
Current consumption (1)	I_{DD1}	fSCL = 0 Hz, /INT = V_{DD}, FOE = GND, V_{DD} = V_{BAT}, FOUT: OFF, Temp. Compensation interval 2.0 s		V_{DD} = 5 V	-	0.72	1.5	µA
Current consumption (2)	I_{DD2}			V_{DD} = 3 V	-	0.70	1.4	

*1) Please contact us about +85 °C < T_a

■ 32.768 kHz-DTCXO Frequency temperature characteristics (Example)

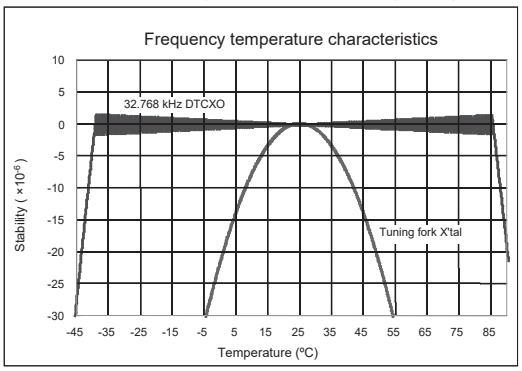

MHz RANGE CRYSTAL UNIT
For Automotive

Product Number
X1E000381Axxx18

FA2016AA

- Nominal frequency range : 16 MHz to 54 MHz
- External dimensions : 2.0 × 1.6 × 0.5 mm
- Overtone order : Fundamental
- Applications : Car audio, Vehicle camera system, Car navigation system, ECU clock, Clock, Meter, Remote keyless entry
- Conforms to AEC-Q200

Specifications (characteristics)

Item	Symbol	Specifications For Automotive	Conditions / Remarks
Nominal frequency range	f_nom	16 MHz to 54 MHz	Fundamental Please contact us about available frequencies.
Storage temperature range	T_stg	-40 °C to +125 °C	Storage as single product.
Operating temperature range	T_use	-40 °C to +125 °C	
Level of drive	DL	200 μW Max.	Recommended: 1 μW to 100 μW
Frequency tolerance	f_tol	$\pm 10 \times 10^{-6}$	+25 °C Please contact us for requirements not listed in this specifications.
Frequency versus temperature characteristics	f_tem	$\pm 20 \times 10^{-6}$ / -40 °C to +85 °C $\pm 50 \times 10^{-6}$ / -40 °C to +125 °C	Please contact us for requirements not listed in this specifications.
Load capacitance	CL	6 pF to ∞	Please specify.
Motional resistance (ESR)	R1	As per table below	-40 °C to +125 °C, DL=100 μW
Frequency aging	f_age	$\pm 3 \times 10^{-6}$ / year Max.	+25 °C, First year

Motional resistance (ESR)

Frequency	Motional resistance
16 MHz ≤ f_nom < 18 MHz	200 Ω Max.
18 MHz ≤ f_nom < 20 MHz	150 Ω Max.
20 MHz ≤ f_nom < 24 MHz	100 Ω Max.
24 MHz ≤ f_nom < 26 MHz	80 Ω Max.
26 MHz ≤ f_nom ≤ 54 MHz	60 Ω Max.

Product name (Standard form)

FA2016AA	24.000000MHz	12.0	+10.0-10.0
①	②	③	④

①Model ②Frequency ③Load capacitance(pF) ④Frequency tolerance(× 10^{-6}, +25 °C)

In addition to the above mentioned specification item, please specify frequency temperature characteristics and operating temperature range in case of inquiry.

External dimensions (Unit:mm)

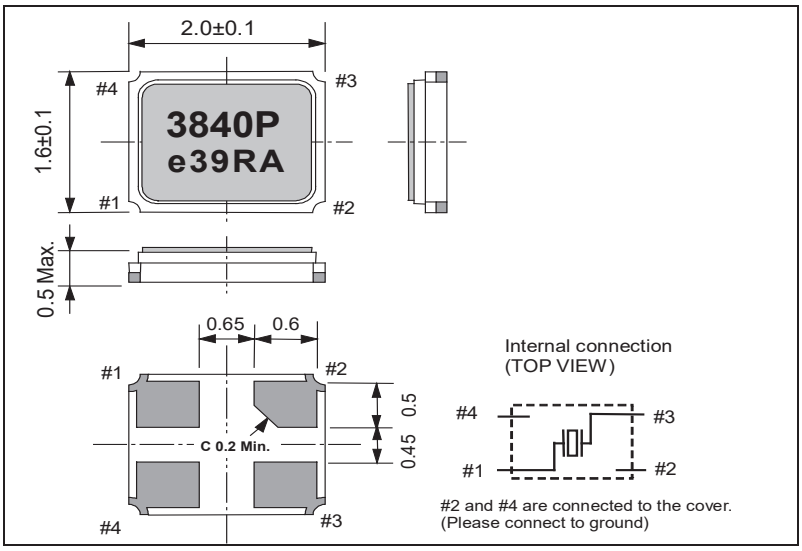

Footprint (Recommended) (Unit:mm)

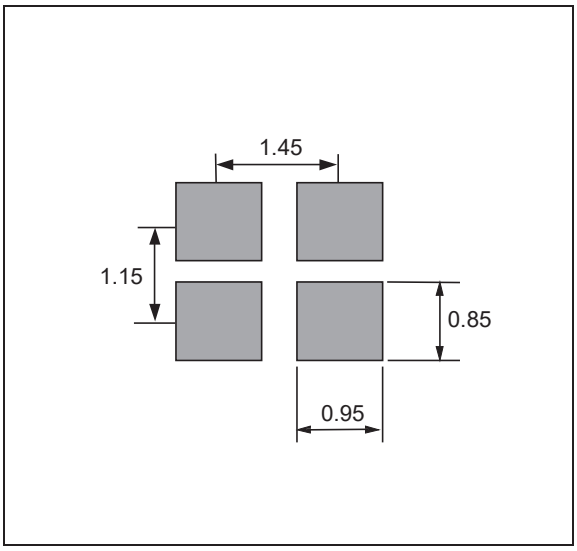

MHz RANGE CRYSTAL UNIT
For Automotive

Product Number
X1E000341xxxx00

FA-238A

- Nominal frequency range : 12 MHz to 50 MHz
- External dimensions : 3.2× 2.5×0.7 mm
- Overtone order : Fundamental
- Applications : Car audio, ECU clock, Clock, Car navigation system, Meter, Remote keyless entry
- Conforms to AEC-Q200

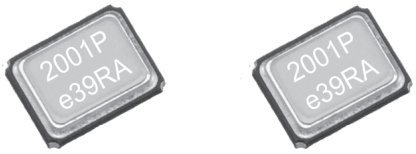

Specifications (characteristics)

Item	Symbol	Specifications For Automotive	Conditions / Remarks
Nominal frequency range	f_nom	12 MHz to 50 MHz	Fundamental Please contact us about available frequencies.
Storage temperature range	T_stg	-40 °C to +125 °C	Storage as single product.
Operating temperature range	T_use	-40 °C to +125 °C	
Level of drive	DL	200 μW Max.	Recommended: 1 μW to 100 μW
Frequency tolerance	f_tol	$\pm15 \times 10^{-6}$ to $\pm50 \times 10^{-6}$	+25 °C Please contact us for requirements not listed in this specifications.
Frequency versus temperature characteristics	f_tem	$\pm30 \times 10^{-6}$ / -40 °C to +85 °C $\pm50 \times 10^{-6}$ / -40 °C to +125 °C	Please contact us for requirements not listed in this specifications.
Load capacitance	CL	7 pF to ∞	Please specify.
Motional resistance (ESR)	R1	As per table below	-40 °C to +125 °C, DL=100 μW
Frequency aging	f_age	$\pm5 \times 10^{-6}$ / year Max.	+25 °C, First year

Motional resistance (ESR)

Frequency	Motional resistance
12 MHz ≤ f_nom ≤ 13 MHz	120 Ω Max.
13 MHz < f_nom < 20 MHz	80 Ω Max.
20 MHz ≤ f_nom < 25 MHz	60 Ω Max.
25 MHz ≤ f_nom ≤ 50 MHz	50 Ω Max.

Product name (Standard form)

FA-238A	28.636360MHz	18.0	+15.0-15.0
①	②	③	④

①Model ②Frequency ③Load capacitance(pF) ④Frequency tolerance(× 10^{-6}, +25 °C)

In addition to the above mentioned specification item, please specify frequency temperature characteristics and operating temperature range in case of inquiry.

External dimensions (Unit:mm)

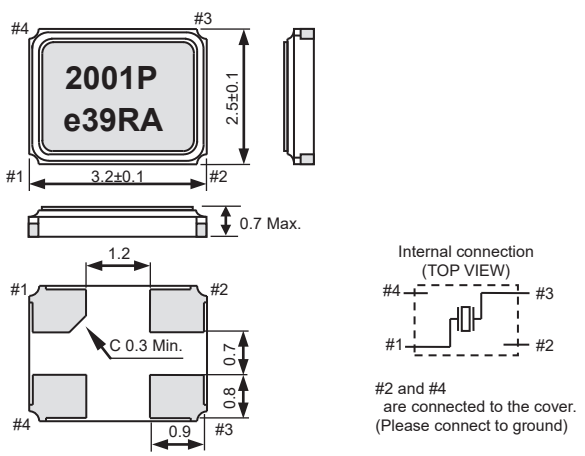

Footprint (Recommended) (Unit:mm)

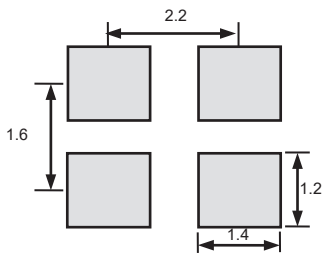

MHz RANGE CRYSTAL UNIT

Built-in thermistor
For Automotive

For Automotive | Pb Free | RoHS Compliant

Product Number
FA2016ASA: X1E000431xxxx16

FA2016ASA

- Nominal frequency range : 38.4 MHz
- External dimensions : 2.0 × 1.6 × 0.68 mm
- Overtone order : Fundamental
- Applications : GPS module, Telematics module
  Car navigation system, etc.
- Conforms to AEC-Q200

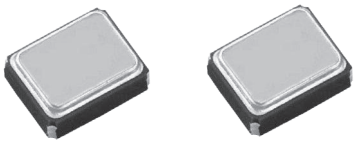

Specifications (characteristics)

Item	Symbol	Specifications	Conditions / Remarks
Nominal frequency range	f_nom	38.4 MHz	Fundamental Please contact us about available frequencies.
Storage temperature range	T_stg	-40 °C to +125 °C	Storage as single product.
Operating temperature range	T_use	-40 °C to +105 °C	
Level of drive	DL	200 μW Max.	Recommended: 1 μW to 100 μW
Frequency tolerance	f_tol	$\pm 10 \times 10^{-6}$	Please contact us about reference temperature. Please contact us for inquiries.
Frequency versus temperature characteristics	f_tem	$\pm 12 \times 10^{-6}$	-30 °C to +85 °C Please contact us for inquiries.
		$\pm 30 \times 10^{-6}$	-40 °C to +105 °C Please contact us for inquiries.
Load capacitance	CL	6 pF to ∞	Please specify.
Motional resistance (ESR)	R1	50 Ω Max.	-40 °C to +105 °C
Frequency aging	f_age	$\pm 1 \times 10^{-6}$ / year Max.	+25 °C, First year
Thermistor resistance	—	Please contact us about specifications.	
Thermistor B constant	—		

Product name (Standard form)

FA2016ASA ① 38.400000MHz ② 7.0 ③ +10.0-10.0 ④

①Model ②Frequency ③Load capacitance(pF) ④Frequency tolerance(× 10^{-6}, +25 °C)

In addition to the above mentioned specification item, please specify frequency temperature characteristics and operating temperature range in case of inquiry.

External dimensions (Unit:mm)

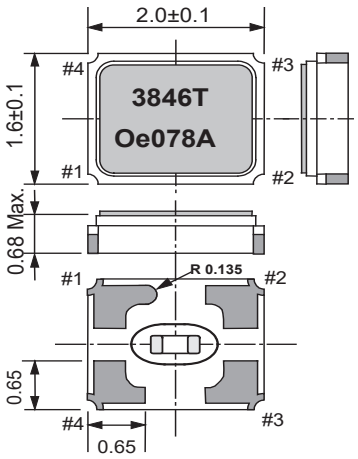

Internal connection (TOP VIEW)

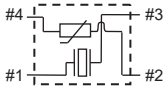

Pin map

Pin	connection
1	Crystal
2	GND, thermistor
3	Crystal
4	thermistor

Footprint (Recommended) (Unit:mm)

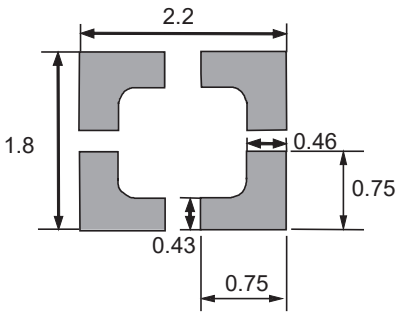

CRYSTAL OSCILLATOR (SPXO)
OUTPUT : CMOS

For Automotive | Pb Free | RoHS Compliant

Product Number
SG2016CAA: X1G005341xxxx00
SG2520CAA: X1G005951xxxx16

SG2016CAA
SG2520CAA

- Frequency : 19 standard frequencies
- Supply voltage : 1.8 V to 3.3 V Typ.
- Function : Standby ($\overline{ST}$)
- Operation temperature : -40 °C to +125 °C
- Conforms to AEC-Q200

SG2016CAA
(2.0 x 1.6 x 0.7 mm)

SG2520CAA
(2.5 x 2.0 x 0.8 mm)

Specifications (characteristics)

Item	Symbol	Specifications			Conditions / Remarks
Output frequency	fo	8 MHz, 10 MHz, 11.2896 MHz, 12 MHz, 12.288 MHz, 14.7456 MHz, 16.6666 MHz, 20 MHz, 22.5792 MHz, 24 MHz, 24.576 MHz, 25 MHz, 27 MHz, 33 MHz, 33.3333 MHz, 40 MHz, 48 MHz, 50 MHz, 54 MHz			
Supply voltage	V_{CC}	T: 1.60 V to 3.63 V			
Storage temperature	T_stg	-55 °C to +125 °C			Storage as single product.
Operating temperature	T_use	H: -40 °C to +105 °C			
		J: -40 °C to +125 °C			
Frequency tolerance	f_tol	J: ±50 × 10^{-6}			
		L: ±100 × 10^{-6}			
Current consumption	I_{CC}	V_{CC} = 1.8 V ± 10 %	V_{CC} = 2.5 V ± 10 %	V_{CC} = 3.3 V ± 10 %	
		2.0 mA Max.	2.1 mA Max.	2.3 mA Max.	No load condition, 8 MHz ≤ fo ≤ 20 MHz
		2.3 mA Max.	2.5 mA Max.	2.7 mA Max.	No load condition, 20 MHz < fo ≤ 40 MHz
		2.6 mA Max.	2.9 mA Max.	3.1 mA Max.	No load condition, 40 MHz < fo ≤ 54 MHz
Stand-by current	I_std	2.7 μA Max.	3.1 μA Max.	3.3 μA Max.	$\overline{ST}$ =GND
Symmetry	SYM	45 % to 55 %			50 % V_{CC} level, L_CMOS ≤ 15 pF
Output voltage	V_{OH}	90 % V_{CC} Min.			
	V_{OL}	10 % V_{CC} Max.			
	V_{OH}	V_{CC} - 0.4 V Min.			
	V_{OL}	0.4 V Max.			
Output load condition	L_CMOS	15 pF Max.			
Input voltage	V_{IH}	80 % V_{CC} Min.			$\overline{ST}$ terminal
	V_{IL}	20 % V_{CC} Max.			
Rise time and Fall time	tr/ tf	3 ns Max. 3.5 ns Max. (@1.8 V±10 %)			20 %V_{CC} to 80 %V_{CC} level, L_CMOS = 15 pF
Start-up time	t_str	5 ms Max.			t = 0 at 90 % V_{CC}
Frequency aging	f_age	±3 × 10^{-6} / year Max.			+25 °C, First year

	1.8 V±10 %	2.5 V±10 %	3.3 V±10 %
I_{OH}	-1.5 mA	-3 mA	-4 mA
I_{OL}	1.5 mA	3 mA	4 mA

	1.8 V±10 %	2.5 V±10 %	3.3 V±10 %
I_{OH}	-3 mA	-4 mA	-6 mA
I_{OL}	3 mA	4 mA	6 mA

Product Name (Standard form): SG2016CAA (Model Name) 25.000000MHz (Frequency) T J H A (①②③) — Standard Specification A

①Supply voltage	
T	1.8 V to 3.3 V Typ.

②Frequency tolerance / ③Operating temperature	
JH	±50 × 10^{-6} / -40 °C to +105 °C
LJ	±100 × 10^{-6} / -40 °C to +125 °C

External dimensions (Unit:mm)

SG2016CAA

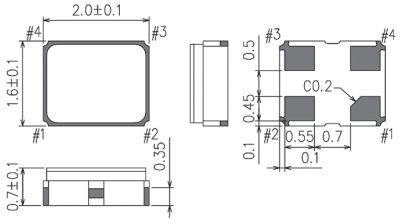

SG2520CAA

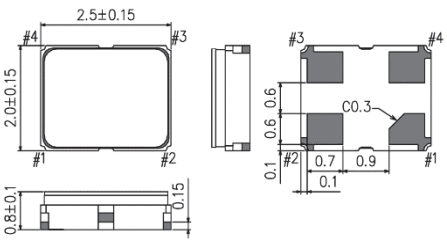

Pin map

Pin	Connection
1	$\overline{ST}$
2	GND
3	OUT
4	V_{CC}

Note.
ST pin = "H" or "open" : Specified frequency output.
ST pin = "L" : Output is high impedance, oscillation stops.

Footprint (Recommended) (Unit:mm)

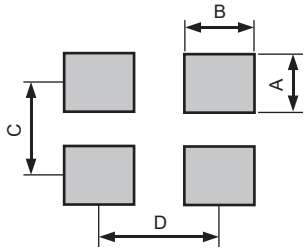

	SG2016CAA	SG2520CAA
A	0.8	0.9
B	0.9	1.1
C	1.1	1.3
D	1.4	1.7

To maintain stable operation, provide a 0.01uF to 0.1uF by-pass capacitor at a location as near as possible to the power source terminal of the crystal product (between V_{CC} - GND).

CRYSTAL OSCILLATOR (Programmable)
OUTPUT: CMOS

SG-8101CGA

For Automotive · Pb Free · RoHS Compliant

Product Number
X1G005171xxxx00

- Frequency range : 0.67 MHz to 170 MHz (1 ppm Step)
- Supply voltage : 1.62 V to 3.63 V
- Function : Output enable (OE) or Standby ($\overline{ST}$)
- Frequency tolerance, operating temperature:
  ±15 ppm (-40 ºC to +85 ºC)
  ±20 ppm (-40 ºC to +105 ºC)
  ±50 ppm (-40 ºC to +125 ºC)
  ±100 ppm (-40 ºC to +125 ºC)
- Package : 2.5 x 2.0 (mm)
- PLL technology to enable short lead time
- Conform to AEC-Q100

Specifications (characteristics)

Item	Symbol	Specifications				Conditions/Remarks	
Supply voltage	V_{CC}	1.80 V Typ.		2.50 V Typ.	3.30 V Typ.		
		1.62 V to 1.98 V	1.98 V to 2.20 V	2.20 V to 2.80 V	2.70 V to 3.63 V		
Output frequency range	f_O	0.67 MHz to 170 MHz					
Storage temperature	T_stg	-40 ºC to +125 ºC				Storage as single product.	
Operating temperature	T_use	-40 ºC to +85 ºC					
		-40 ºC to +105 ºC					
		-40 ºC to +125 ºC					
Frequency tolerance*1	f_tol	B : ±15 × 10^{-6}				T_use = -40 ºC to +85 ºC	
		C : ±20 × 10^{-6}				T_use = -40 ºC to +105 ºC	
		J : ±50 × 10^{-6}				T_use = -40 ºC to +125 ºC	
		L : ±100 × 10^{-6}				T_use = -40 ºC to +125 ºC	
Current consumption	I_{CC}	3.3 mA Max.	3.4 mA Max.	3.5 mA Max.	3.6 mA Max.	T_use = +125 ºC	No load, f_O = 20 MHz
		3.2 mA Max.	3.3 mA Max.	3.4 mA Max.	3.5 mA Max.	T_use = +105 ºC	
		2.7 mA Typ.		2.9 mA Typ.	3.0 mA Typ.	T_use = +25 ºC	
		5.6 mA Max.	5.9 mA Max.	6.8 mA Max.	8.2 mA Max.	T_use = +125 ºC	No load, f_O = 170 MHz
		5.5 mA Max.	5.8 mA Max.	6.7 mA Max.	8.1 mA Max.	T_use = +105 ºC	
		4.7 mA Typ.		5.7 mA Typ.	6.8 mA Typ.	T_use = +25 ºC	
Output disable current	I_dis	3.3 mA Max.	3.4 mA Max.	3.4 mA Max.	3.6 mA Max.	T_use = +125 ºC	OE = GND, f_O = 170 MHz
		3.2 mA Max.	3.3 mA Max.	3.3 mA Max.	3.5 mA Max.	T_use = +105 ºC	
Standby current	I_std	2.3 µA Max.	2.5 µA Max.	3.0 µA Max.	4.2 µA Max.	T_use = +125 ºC	$\overline{ST}$ = GND
		0.9 µA Max.	1.0 µA Max.	1.5 µA Max.	2.5 µA Max.	T_use = +105 ºC	
		0.3 µA Typ.	0.4 µA Typ.	0.5 µA Typ.	1.1 µA Typ.	T_use = +25 ºC	
Symmetry	SYM	45 % to 55 %				50 % V_{CC} Level	
Output voltage (DC characteristics)	V_{OH}	90 % V_{CC} Min.				I_{OH}/I_{OL} Conditions [mA]	
	V_{OL}	10 % V_{CC} Max.					

Rise/Fall time selection	V_{CC}	*A	*B	*C	*D
Default (f_O > 40 MHz), Fast	I_{OH}	-2.5	-3.5	-4.0	-5.0
	I_{OL}	2.5	3.5	4.0	5.0
Default (f_O ≤ 40 MHz)	I_{OH}	-1.5	-2.0	-2.5	-3.0
	I_{OL}	1.5	2.0	2.5	3.0
Slow	I_{OH}	-1.0	-1.5	-2.0	-2.5
	I_{OL}	1.0	1.5	2.0	2.5

*A: 1.62 V to 1.98 V, *B: 1.98 V to 2.20 V,
*C: 2.20 V to 2.80 V, *D: 2.70 V to 3.63 V

Item	Symbol	Specifications	Conditions/Remarks
Output load condition	L_CMOS	15 pF Max.	
Input voltage	V_{IH}	70 % V_{CC} Min.	OE or $\overline{ST}$
	V_{IL}	30 % V_{CC} Max.	
Rise and Fall time, Default	tr/tf	3.0 ns Max.	f_O > 40 MHz; 20 % - 80 % V_{CC}, L_CMOS = 15 pF
		6.0 ns Max.	f_O ≤ 40 MHz
Rise and Fall time, Fast		3.0 ns Max.	f_O = 0.67 MHz to 170 MHz
Rise and Fall time, Slow		10.0 ns Max.	f_O = 0.67 MHz to 20 MHz
Disable Time	t_stp	1 µs Max.	Measured from the time OE or $\overline{ST}$ pin crosses 30 % V_{CC}
Enable Time	t_sta	1 µs Max.	Measured from the time OE pin crosses 70 % V_{CC}
Resume Time	t_res	3 ms Max.	Measured from the time $\overline{ST}$ pin crosses 70 % V_{CC}
Start-up time	t_str	3 ms Max.	Measured from the time V_{CC} reaches its rated minimum value, 1.62 V
Frequency aging	f_aging	This is included in frequency tolerance specification.	+25 °C, first year

*1 Frequency tolerance includes initial frequency tolerance, temperature variation, supply voltage variation, reflow drift, load drift and aging (+25 ºC, 1 year).

Pin description

Pin	Name	I/O type	Function		
1	OE	Input	Output enable	High:	Specified frequency output from OUT pin
				Low:	Out pin is low (weak pull down), only output driver is disabled.
	$\overline{ST}$	Input	Standby	High:	Specified frequency output from OUT pin
				Low:	Out pin is low (weak pull down), Device goes to standby mode. Supply current reduces to the least as I_std.
2	GND	Power	Ground		
3	OUT	Output	Clock output		
4	V_{CC}	Power	Power supply		

Product Name

SG-8101CGA 170.000000MHz T C H P A
① ② ③ ④⑤⑥⑦⑧

①Model, ②Package type,
③Frequency, ④Supply voltage,
⑤Frequency tolerance, ⑥Operating temperature,
⑦Function, ⑧Rise/Fall time

②Package type
CG: 2.5 mm x 2.0 mm

④Supply voltage
T: 1.8 V to 3.3 V Typ.

⑤⑥	Frequency tolerance	Operating temperature
BG	B: 15 x 10^{-6}	G: -40 ° C to +85 ° C
CH	C: 20 x 10^{-6}	H: -40 ° C to +105 ° C
JJ	J: 50 x 10^{-6}	J: -40 ° C to +125 ° C
LJ	L: 100 x 10^{-6}	

⑦Function
P: Output Enable
S: Standby

⑧ Rise/Fall time
A: Default
B: Fast
C: Slow

External dimensions (Unit: mm)

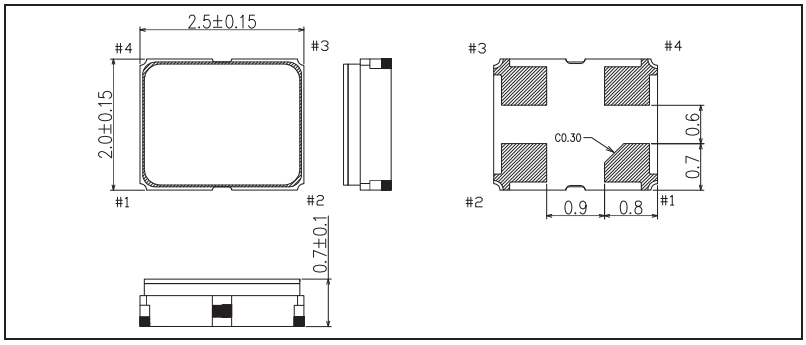

Footprint (Recommended) (Unit: mm)

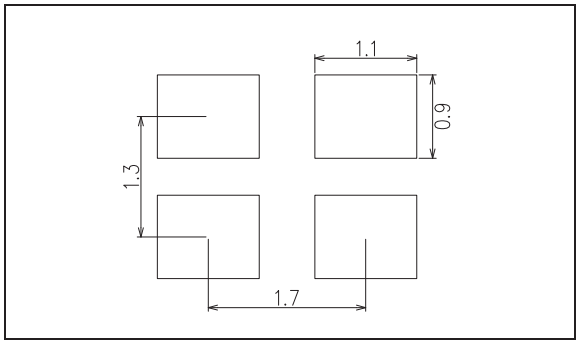

■Notes:
In order to achieve optimum jitter performance, the 0.1 μF capacitor between V_{CC} and GND should be placed. It is also recommended that the capacitors are placed on the device side of the PCB, as close to the device as possible and connected together with short wiring pattern.

CRYSTAL OSCILLATOR (Programmable)
SPREAD SPECTRUM
OUTPUT: CMOS

For Automotive

Pb Free

RoHS Compliant

Product Number
X1G005281xxxx00

SG-9101CGA

- Frequency range : 0.67 MHz to 170 MHz (1 × 10^{-6} Step)
- Supply voltage : 1.62 V to 3.63 V
- Function : Output enable (OE) or Standby ($\overline{ST}$)
- Down or Center spread modulation
- Configurable spreading
  3 modulation profile (Hershey-kiss, Sine-wave, Triangle),
  4 modulation frequency, 6 spread percentage
- Package : 2.5 × 2.0 mm
- PLL technology to enable short lead time
- Conform to AEC-Q100

Specifications (characteristics)

Item	Symbol	Specifications				Conditions/Remarks	
Supply voltage	V_{CC}	1.80 V Typ.		2.50 V Typ.	3.30 V Typ.		
		1.62 V to 1.98 V	1.98 V to 2.20 V	2.20 V to 2.80 V	2.70 V to 3.63 V		
Output frequency range	f_O	0.67 MHz to 170 MHz					
Storage temperature	T_stg	-40 ºC to +125 ºC				Storage as single product.	
Operating temperature	T_use	J: -40 ºC to +125 ºC				f_tol = ±100 × 10^{-6}	
		H: -40 ºC to +105 ºC				f_tol = ±50 × 10^{-6}	
Frequency tolerance*1	f_tol	±100 × 10^{-6}, ±50 × 10^{-6}				Average frequency of 1 s gate time.	
Current consumption	I_{CC}	3.5 mA Max.	3.6 mA Max.	3.7 mA Max.	3.8 mA Max.	T_use = +125 ºC	No load, f_O = 20 MHz
		3.4 mA Max.	3.5 mA Max.	3.6 mA Max.	3.7 mA Max.	T_use = +105 ºC	
		2.9 mA Typ.		3.0 mA Typ.	3.2 mA Typ.	T_use = +25 ºC	
		5.8 mA Max.	6.1 mA Max.	7.0 mA Max.	8.4 mA Max.	T_use = +125 ºC	No load, f_O = 170 MHz
		5.7 mA Max.	6.0 mA Max.	6.9 mA Max.	8.3 mA Max.	T_use = +105 ºC	
		4.9 mA Typ.		5.9 mA Typ.	7.0 mA Typ.	T_use = +25 ºC	
Output disable current	I_dis	3.5 mA Max.	3.5 mA Max.	3.6 mA Max.	3.8 mA Max.	T_use = +125 ºC	OE = GND, f_O = 170 MHz
		3.4 mA Max.	3.4 mA Max.	3.5 mA Max.	3.7 mA Max.	T_use = +105 ºC	
Standby current	I_std	2.3 µA Max.	2.5 µA Max.	3.0 µA Max.	4.2 µA Max.	T_use = +125 ºC	$\overline{ST}$ = GND
		0.9 µA Max.	1.0 µA Max.	1.5 µA Max.	2.5 µA Max.	T_use = +105 ºC	
		0.3 µA Typ.	0.4 µA Typ.	0.5 µA Typ.	1.1 µA Typ.	T_use = +25 ºC	
Symmetry	SYM	45 % to 55 %				50 % V_{CC} Level	
Output voltage (DC characteristics)	V_{OH}	90 % V_{CC} Min.				I_{OH}/I_{OL} Conditions [mA]	
	V_{OL}	10 % V_{CC} Max.					

Rise/Fall time	Vcc	*A	*B	*C	*D
Default (f_O > 40 MHz), Fast	I_{OH}	-2.5	-3.5	-4.0	-5.0
	I_{OL}	2.5	3.5	4.0	5.0
Default (f_O ≤ 40 MHz)	I_{OH}	-1.5	-2.0	-2.5	-3.0
	I_{OL}	1.5	2.0	2.5	3.0
Slow	I_{OH}	-1.0	-1.5	-2.0	-2.5
	I_{OL}	1.0	1.5	2.0	2.5

*A : 1.62 V to 1.98 V, *B : 1.98 V to 2.20 V,
*C : 2.20 V to 2.80 V, *D : 2.70 V to 3.63 V

Item	Symbol	Specifications	Conditions/Remarks	
Output load condition	L_CMOS	15 pF Max.		
Input voltage	V_{IH}	70 % V_{CC} Min.	OE or $\overline{ST}$	
	V_{IL}	30 % V_{CC} Max.		
Rise and Fall time, Default	tr/tf	3.0 ns Max.	f_O > 40 MHz	20 % - 80 % V_{CC}, L_CMOS = 15 pF
		6.0 ns Max.	f_O ≤ 40 MHz	
Rise and Fall time, Fast		3.0 ns Max.	f_O = 0.67 MHz ~ 170 MHz	
Rise and Fall time, Slow		10.0 ns Max.	f_O = 0.67 MHz ~ 20 MHz	
Disable Time	t_stp	1 µs Max.	Measured from the time OE or $\overline{ST}$ pin crosses 30 % V_{CC}	
Enable Time	t_sta	1 µs Max.	Measured from the time OE pin crosses 70 % V_{CC}	
Resume Time	t_res	3 ms Max.	Measured from the time $\overline{ST}$ pin crosses 70 % V_{CC}	
Start-up time	t_str	3 ms Max.	Measured from the time V_{CC} reaches its rated minimum value, 1.62 V	
Frequency aging	f_aging	This is included in frequency tolerance specification.	+25 °C, first year	

*1 Frequency tolerance includes initial frequency tolerance, temperature variation, supply voltage variation, reflow drift, load drift and aging (+25 ºC, 1 year).

Pin description

Pin	Name	I/O type	Function		
1	OE	Input	Output enable	High:	Specified frequency output from OUT pin
				Low:	Out pin is low (weak pull down), only output driver is disabled.
	$\overline{ST}$	Input	Standby	High:	Specified frequency output from OUT pin
				Low:	Out pin is low (weak pull down), Device goes to standby mode. Supply current reduces to the least as I_std.
2	GND	Power	Ground		
3	OUT	Output	Clock output		
4	V_{CC}	Power	Power supply		

Product Name

SG-9101CGA 170.000000MHz C 20 P J A A A
① ② ③ ④ ⑤ ⑥ ⑦ ⑧ ⑨ ⑩

①Model ②Package type ③Frequency
④Spread type ⑤Spread width ⑥Function
⑦Operating temperature / Frequency tolerance
⑧Modulation frequency ⑨Spread profile
⑩Rise/Fall time

②Package Type	
CG	2.5 mm × 2.0 mm

④Spread type	
C	Center spread
D	Down spread

⑤Spread width		
	Center spread	Down spread
02	±0.25 %	
05	±0.5 %	-0.5 %
07	±0.75 %	
10	±1.0 %	-1.0 %
15	±1.5 %	-1.5 %
20	±2.0 %	-2.0 %
30		-3.0 %
40		-4.0 %

⑥Function	
P	Output enable
S	Standby

⑦Operating temp. / Freq. tolerance	
J	-40 °C to +125 °C / ±100 × 10^{-6}
H	-40 °C to +105 °C / ±50 × 10^{-6}

⑧Modulation frequency	
A	25.4 kHz (default)
B	12.7 kHz
C	8.5 kHz
D	6.3 kHz

⑨Spread profile	
A	Hershey-kiss (default)
B	Sine-wave
C	Triangle

⑩Rise/Fall time	
A	Default
B	Fast
C	Slow

External dimensions (Unit: mm)

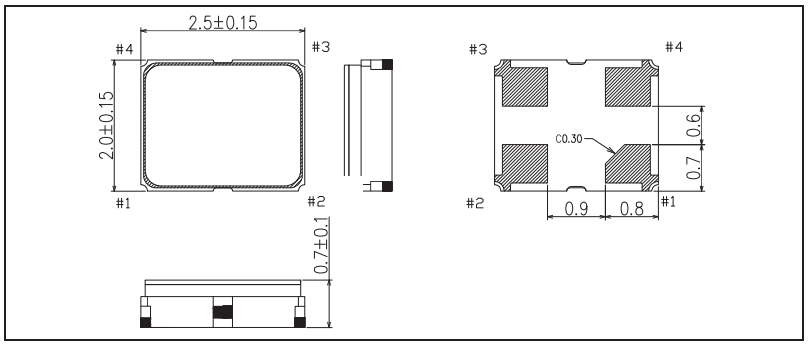

Footprint (Recommended) (Unit: mm)

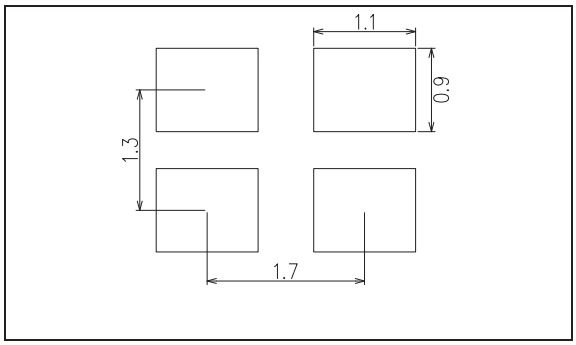

■Notes:
In order to achieve optimum jitter performance, the 0.1 μF capacitor between V_{CC} and GND should be placed. It is also recommended that the capacitors are placed on the device side of the PCB, as close to the device as possible and connected together with short wiring pattern.

RF Transmitter Module Conforms to AEC-Q100

SR3225SAA

Product Number
SR3225SAA: X1G00479xxxxx00

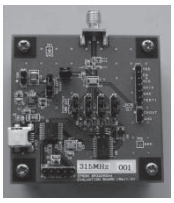

SR3225SAA is a wireless transmitter module for UHF range. Crystal resonator, oscillator, PLL and Power Amp are integrated in 3.2 mm x 2.5 mm ceramic package. The wireless transmission function can be configured by connect to the external control devices. It is suitable for small wireless transmitter. The evaluation kit is available.

Application

- Remote Keyless Entry, Passive Entry
- Short range radio data transmitter
- Garage door opener
- Transmitter for RFID tag

Overview

- Carrier frequency bands:
  300 MHz ~ 465 MHz (0.25 kHz Step),
  600 MHz ~ 930 MHz (0.49 kHz Step)
- Δ-Σ fractional-N based PLL
- Programmable Power Amp output power:
  -15 ~ 11 dBm, 128 steps
- Modulation types: ASK/OOK/FSK with Soft-ASK and/or Soft FSK shaping
- 3-wire/4-wire SPI interface
- SFR (Special Function Register)
- Embedded 32 MHz crystal resonator and oscillation circuit
- Programmable clock output via CKOUT
- Programmable voltage threshold of Under Voltage Detection: 4 steps (1.8 V ~ 2.4 V)
- Fail-Safe mechanism (PLL Loss of Lock, VCO auto-calibration error, Under Voltage Detection)

Block diagram

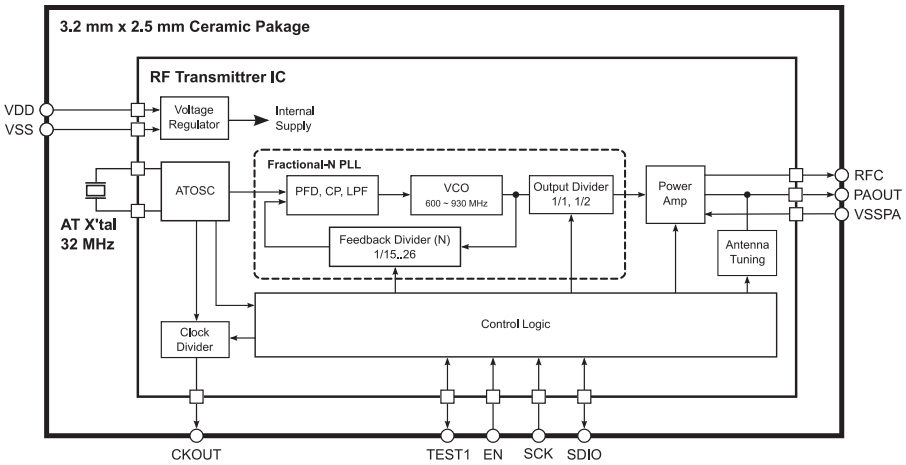

Specification (characteristics)

Parameter	Symbol	Condition	Min.	Typ.	Max.	Unit
Supply voltage	VDD	-	1.8	3.0	3.6	V
Operation temperature	Ta	-	-40	-	+85	°C
Storage temperature	Tstg	-	-40	-	+125	°C
Supply current Powerdown Mode	I_{DDPD}	VDD = 3.0 V, Ta = +25 °C	-	20	100	nA
Supply current Transmitter-Active Mode	I_{DDTMA}	F_{TX} = 315 MHz, Pout = 5 dBm,	-	10.0	11.0	mA
		F_{TX} = 315 MHz, Pout = 8 dBm,	-	12.7	13.7	
		F_{TX} = 315 MHz, Pout = 10 dBm,	-	15.0	16.0	
Carrier frequency bands	F_{TX}	-	300	-	465	MHz
			600	-	930	
ASK Bit rate	R_{ASK}	NRZ	-	-	100	kbps
FSK Bit rate	R_{FSK}	NRZ	-	-	50	kbps
Crystal frequency tolerance	F_{TOL}	Ta = +25 °C, without aging	-2	-	2	ppm
Crystal temperature variation	F_{TC}	-40 °C ~ +85 °C	-20	-	20	ppm
Nominal output power	P_{OUT}	Ta = +25 °C, VDD = 3.0 V, F_{TX} = 315 MHz, HPWR =1, AM* = 0x3F	10	11	12	dBm
		Ta = +25 °C, VDD = 3.0 V, F_{TX} = 315 MHz, HPWR =0, AM* = 0x01	-16	-15	-14	

External dimensions (Unit: mm)

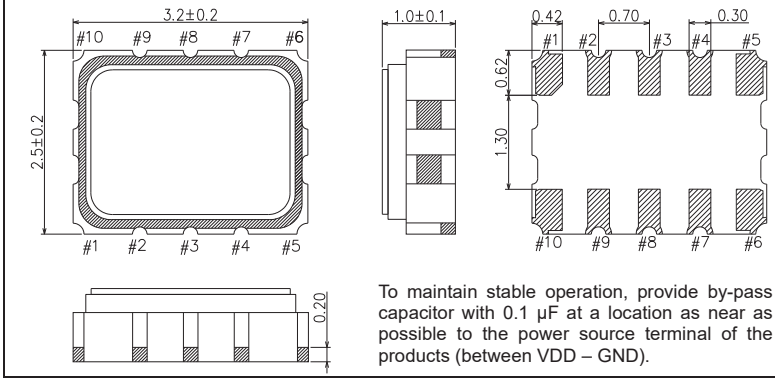

To maintain stable operation, provide by-pass capacitor with 0.1 μF at a location as near as possible to the power source terminal of the products (between VDD – GND).

Pin descriptions

Pin No.	Pin Name	Function
1	TEST1	Test, Transmission data input or SPI interface data output
2	EN	Enable input or SPI interface chip select
3	SCK	SPI interface clock input
4	SDIO	SPI data input / output or Transmission data input
5	CKOUT	Clock output
6	VSSPA	GND for Power Amp
7	PAOUT	Power Amp output
8	RFC	RF choke coil connect pin
9	VDD	Positive power supply
10	VSS	GND

VC-TCXO / TCXO / TCXO-Standby For Automotive 105 ºC High temperature range

For Automotive | Pb Free | RoHS Compliant

Product Number (Please contact us)
TG2016SKA : X1G005371xxxx16

TG2016SKA

- Output frequency : 13 MHz to 55 MHz
- Supply voltage : 1.8 V Typ. / 3.3 V Typ.
- Frequency / temperature characteristics : $\pm 0.5 \times 10^{-6}$ Max. (-40 °C to +105 °C)
- External dimensions: 2.0 × 1.6 × 0.7 mm Max.
- Applications : GNSS for Automotive, V2X (TCU, DSRC)*
- Features : Low noise, 105 ºC High temp, Stand-by function ($\overline{ST}$)
- Conforms to AEC-Q100

* GNSS: Global Navigation Satellite System V2X: Vehicle to Everything TCU: Telematics control unit DSRC: Dedicated Short Range Communication

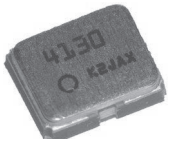

TG2016SKA

(2.0 × 1.6 × 0.7 mm)

Specifications (characteristics)

Item	Symbol	VC-TCXO	TCXO	TCXO-Standby	Conditions / Remarks
Output frequency range	fo	13 MHz to 55 MHz			
		26 MHz, 49.58 MHz			Standard frequency
Supply voltage	V_{CC}	1.8 V ±0.1 V / 3.3 V ±5 %			Supply voltage range :1.7 V to 3.63 V
Storage temperature range	T_stg	-55 °C to +125 °C			Storage as single product.
Operating temperature range	T_use	H: -40 °C to +105 °C			Standard
Frequency tolerance	f_tol	$\pm 2.0 \times 10^{-6}$ Max.			After 3 times reflow, +25 °C
Frequency/temperature Characteristics	fo-T_C	C: $\pm 0.5 \times 10^{-6}$ Max.			Standard stability version
Frequency/load coefficient	fo-Load	$\pm 0.2 \times 10^{-6}$ Max.			10 kΩ // 10 pF ±10 %
Frequency/voltage coefficient	fo-V_{CC}	$\pm 0.2 \times 10^{-6}$ Max.			V_{CC} ± 5 %
Frequency aging	f_age	$\pm 1.0 \times 10^{-6}$ Max.			+25 °C, First year, 13 MHz ≤ fo ≤ 20 MHz, 26 MHz ≤ fo ≤ 40 MHz
		$\pm 1.5 \times 10^{-6}$ Max.			+25 °C, First year, 20 MHz < fo < 26 MHz 40 MHz < fo ≤ 55 MHz
Current consumption	I_{CC}	2.0 mA Max. 2.5 mA Max.			13 MHz ≤ fo ≤ 40 MHz 40 MHz < fo ≤ 55 MHz
Input resistance	Zin	500 kΩ Min.	-		V_C - GND (DC)
Frequency control range	f_cont	$\pm 8.0 \times 10^{-6}$ to $\pm 15.0 \times 10^{-6}$	-		B: V_C = 0.9 V ±0.6 V (V_{CC} = 1.8 V) or E: V_C = 1.65 V ±1.0 V (V_{CC} = 3.3 V)
Frequency change polarity	f_cp	Positive polarity	-		
Stand-by current	I_std	-		10 µA Max.	$\overline{ST}$ = GND
Input voltage	V_{IH}	-		80 % Vcc Min.	$\overline{ST}$ terminal
	V_{IL}	-		20 % Vcc Max.	
Symmetry	SYM	40 % to 60 %			GND level (DC cut)
Output voltage	Vpp	0.8 V Min.			Peak to Peak
Start-up time	t_str	2.0 ms Max.			T = 0 at 90 % V_{CC}
Output load	Load_R	10 kΩ			DC cut capacitor = 0.01 µF
	Load_C	10 pF			
G-sensitivity	Gs	1.5×10^{-9}/G Max.			30 Hz to 3 kHz, sinewave, 3axes

* Note : Please contact us for requirements not listed in this specification.

Product Name (Standard form): TG2016 SKA 26.000000MHz E C H N N M
① ② ③ ④ ⑤ ⑥ ⑦ ⑧ ⑨

①Model(TG2016) ②Output (S: Clipped sine wave)
③Frequency ④Supply voltage (Refer to symbol table)
⑤Frequency / temperature characteristics (C: $\pm 0.5 \times 10^{-6}$ Max.)
⑥Operating temperature (H: -40 °C to +105 °C) ⑦ST function (N: Non, S: Standby)
⑧Vc function(Refer to symbol table) ⑨Internal identification code

④Supply voltage[V_{CC}] ,⑧Vc function[Vc] (Symbol table)

Voltage [V]	TCXO	VC-TCXO	
④V_{CC} (Typ.)	E: 1.8 C: 3.3	E: 1.8	C: 3.3
⑧Vc (Typ.)	N: Non	B: 0.9	E: 1.65

External dimensions (Unit: mm)

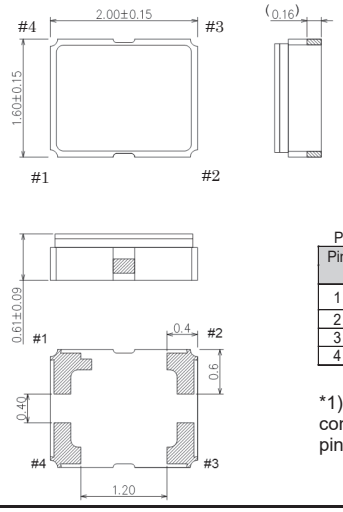

Pin map

Pin	Connection		
	VC-TCXO	TCXO	TCXO-Standby
1	Vc	N.C.*1	$\overline{ST}$
2	GND		
3	OUT		
4	V_{CC}		

*1) Please keep "N.C." pin OPEN condition or GND connection. "N.C." pin doesn't work as a ground pin.

Footprint (Recommended) (Unit: mm)

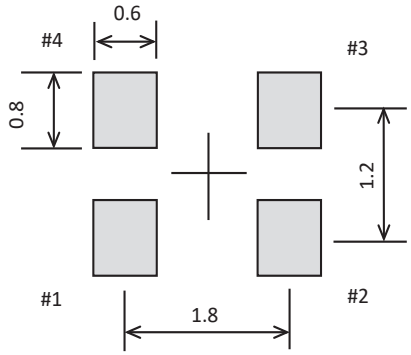

To maintain stable operation, provide a 0.01 µF to 0.1 µF by-pass capacitor at a location as near as possible to the power source terminal of the crystal product (between V_{CC} - GND).

VC-TCXO / TCXO / TCXO-Standby
For Automotive
85 ºC High temperature range

Product Number (Please contact us)
TG2016SLA : X1G005741xxxx16

TG2016SLA

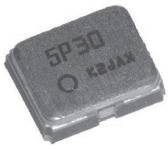

TG2016SLA

(2.0 × 1.6 × 0.7 mm)

- Output frequency : 13 MHz to 55 MHz
- Supply voltage : 1.8 V Typ. / 3.3 V Typ.
- Frequency / temperature characteristics : ±0.5 × 10^{-6} Max. (-40 °C to +85 °C)
- External dimensions: 2.0 × 1.6 × 0.7 mm Max.
- Applications : GNSS for Automotive, V2X (TCU, DSRC)*
- Features : Low noise, Stand-by function ($\overline{ST}$)
- Conforms to AEC-Q100

* GNSS: Global Navigation Satellite System V2X: Vehicle to Everything TCU: Telematics control unit DSRC: Dedicated Short Range Communication

Specifications (characteristics)

Item	Symbol	VC-TCXO	TCXO	TCXO-Standby	Conditions / Remarks
Output frequency range	fo	13 MHz to 55 MHz			
		26 MHz, 49.58 MHz			Standard frequency
Supply voltage	V_{CC}	1.8 V ±0.1 V / 3.3 V ±5 %			Supply voltage range :1.7 V to 3.63 V
Storage temperature range	T_stg	-55 °C to +125 °C			Storage as single product.
Operating temperature range	T_use	G: -40 °C to +85 °C			Standard
Frequency tolerance	f_tol	±2.0 × 10^{-6} Max.			After 3 times reflow, +25 °C
Frequency/temperature characteristics	fo-T_C	C: ±0.5 × 10^{-6} Max.			Standard stability version
Frequency/load coefficient	fo-Load	±0.2 × 10^{-6} Max.			10 kΩ // 10 pF ±10 %
Frequency/voltage coefficient	fo-V_{CC}	±0.2 × 10^{-6} Max.			V_{CC} ± 5 %
Frequency aging	f_age	±1.0 × 10^{-6} Max.			+25 °C, First year, 13 MHz ≤ fo ≤ 20 MHz, 26 MHz ≤ fo ≤ 40 MHz
		±1.5 × 10^{-6} Max.			+25 °C, First year, 20 MHz < fo < 26 MHz 40 MHz < fo ≤ 55 MHz
Current consumption	I_{CC}	2.0 mA Max. 2.5 mA Max.			13 MHz ≤ fo ≤ 40 MHz 40 MHz < fo ≤ 55 MHz
Input resistance	Zin	500 kΩ Min.	-		V_C - GND (DC)
Frequency control range	f_cont	±8.0 × 10^{-6} to ±15.0 × 10^{-6}	-		B: V_C = 0.9 V ±0.6 V (V_{CC} = 1.8 V) or E: V_C = 1.65 V ±1.0 V (V_{CC} = 3.3 V)
Frequency change polarity	f_cp	Positive polarity	-		
Stand-by current	I_std	-		10 µA Max.	$\overline{ST}$ = GND
Input voltage	V_{IH}	-		80 % Vcc Min.	$\overline{ST}$ terminal
	V_{IL}	-		20 % Vcc Max.	
Symmetry	SYM	40 % to 60 %			GND level (DC cut)
Output voltage	Vpp	0.8 V Min.			Peak to Peak
Start-up time	t_str	2.0 ms Max.			T = 0 at 90 % V_{CC}
Output load	Load_R	10 kΩ			DC cut capacitor = 0.01 µF
	Load_C	10 pF			
G-sensitivity	Gs	1.5 × 10^{-9} /G Max.			30 Hz to 3 kHz,sinewave,3axes

* Note : Please contact us for requirements not listed in this specification.

Product Name (Standard form) TG2016 SLA 26.000000MHz E C G N N M
① ② ③ ④ ⑤ ⑥ ⑦ ⑧ ⑨

①Model(TG2016) ②Output (S: Clipped sine wave)
③Frequency ④Supply voltage (Refer to symbol table)
⑤Frequency / temperature characteristics (C: ±0.5 × 10^{-6} Max.)
⑥Operating temperature (G: -40 °C to +85 °C) ⑦ST function (N: Non, S: Standby)
⑧Vc function(Refer to symbol table) ⑨Internal identification code

④Supply voltage[V_{CC}] ,⑧Vc function[Vc] (Symbol table)			
Voltage [V]	TCXO	VC-TCXO	
④V_{CC} (Typ.)	E: 1.8 C: 3.3	E: 1.8	C: 3.3
⑧Vc (Typ.)	N: Non	B: 0.9	E: 1.65

External dimensions (Unit:mm)

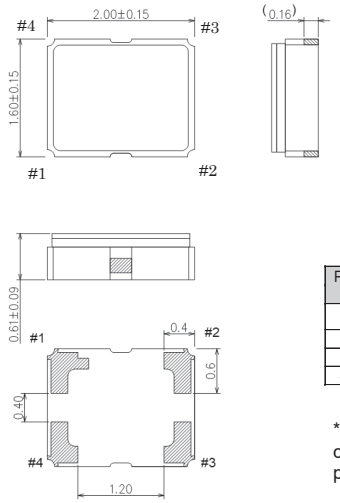

Pin map

Pin	Connection		
	VC-TCXO	TCXO	TCXO-Standby
1	Vc	N.C.*1	$\overline{ST}$
2	GND		
3	OUT		
4	V_{CC}		

*1) Please keep "N.C." pin OPEN condition or GND connection. "N.C." pin doesn't work as a ground pin.

Footprint (Recommended) (Unit:mm)

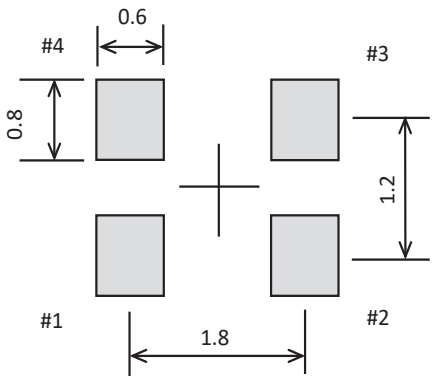

To maintain stable operation, provide a 0.01 µF to 0.1 µF by-pass capacitor at a location as near as possible to the power source terminal of the crystal product (between V_{CC} - GND).

GYRO SENSOR FOR AUTOMOTIVE

XV-9100CD
XV-9300CD

Product number
XV-9100CD: X2A000221xxxx00
XV-9300CD: X2A000231xxxx00

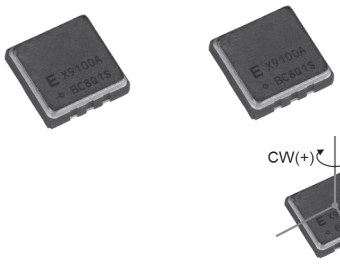

- Wide temperature support, up to +105degree.
- High reliability by installing the self diagnosis function
- Ultra small and light weight using the original Double-T structure quartz crystal element.
- Excellent performance of shock-resistance and vibration-resistance.
- Conforms to AEC-Q100 (please contact us)

Recommended Application

- Electric Stability Control System / Rollover Protection System

Specifications (characteristics)

Item		Symbol	Specifications		Conditions / Remarks
			XV-9100CD	XV-9300CD	
Supply Voltage		V_{DD}	5.0 V ±0.25 V		
Temperature range	Storage Temperature	T_{STG}	-40 °C to +105 °C		
	Operating Temperature	T_{OPR}	-40 °C to +105 °C		
Scale factor		So	0.004 × V_{DD} mV/(°/s)	0.0012 × V_{DD} mV/(°/s)	
Bias		V_0	0.5 × V_{DD} V Typ.		
Rate range		I	±100 °/s	±300 °/s	
Non linearity		NL	±0.5 % FS		
Frequency response		BW	52.6 Hz Typ.		-3dB point
Cross axes		OS	±5 %		Ta=+25°C
Current consumption		Iop	6.7 mA Typ.		V_O : Output No load condition
Noise		rN	1.0 (°/s) p-p Max.	3.3 (°/s) p-p Max.	5kHz sampled at 200ms
Start-up time		T_{ACT}	300 ms Max.		

Product Name (Standard form)
XV-9100 CD ①　**.****** kHz ③
②
①Model　②Package type　③Frequency (not necessary to specify)

External Dimensions (Unit:mm)

•XV-9100CD / XV-9300CD

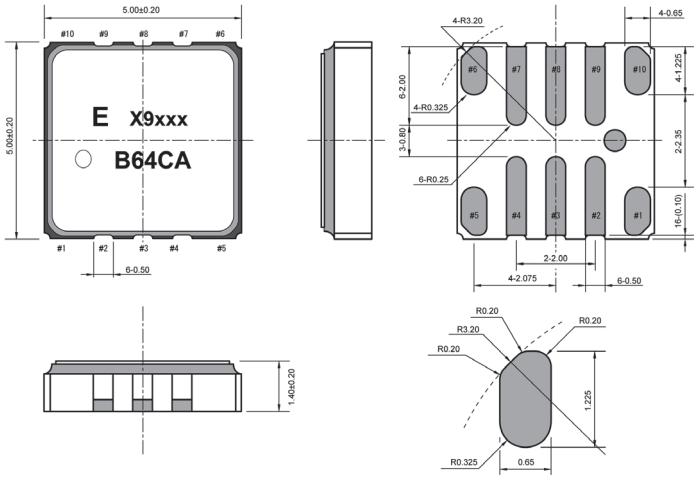

Pin map

Pin	XV-9100/9300CD
1	GND
2	CLK
3	DIAG
4	V_{DD}
5	GND
6	N.C.
7	Vout
8	GND
9	CHECK
10	N.C.

Do not connect "N.C." pins externally devices.

Footprint (Recommended) (Unit:mm)

•XV-9100CD / XV-9300CD

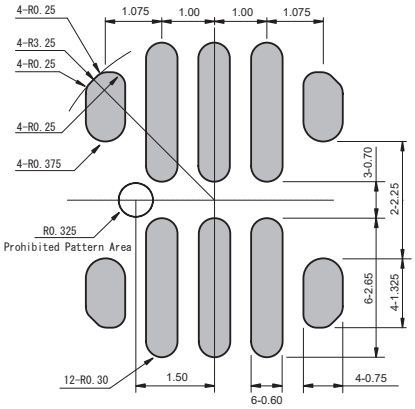

GYRO SENSOR FOR AUTOMOTIVE

XV-9100LV / LP
XV-9300LV / LP

Automotive Safety

Pb Free

RoHS Compliant

Product number
XV-9100LV: X2A000031xxxx00
XV-9100LP: X2A000041xxxx00
XV-9300LV: X2A000051xxxx00
XV-9300LP: X2A000061xxxx00

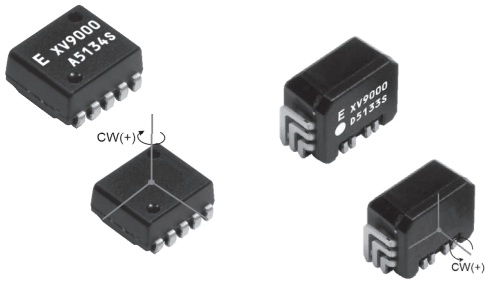

- Wide temperature support, up to +125degree, good for engine room usage.
- High reliability by installing the self diagnosis function
- Ultra small and light weight using the original Double-T structure quartz crystal element.
- Excellent performance of shock-resistance and vibration-resistance.
- High reliability and connectivity to PCB using J-lead terminal.
- Conforms to AEC-Q100 (please contact us)

Recommended Application
- Electric Stability Control System / Rollover Protection System

Specifications (characteristics)

Item		Symbol	Specifications		Conditions / Remarks
			XV-9100LV / LP	XV-9300LV / LP	
Supply Voltage		VDD	5.0 V ±0.25 V		
Temperature range	Storage Temperature	TSTG	-40 °C to +125 °C		
	Operating Temperature	TOPR	-40 °C to +125 °C		
Scale factor		So	0.004 × VDD mV/(°/s)	0.0012 × VDD mV/(°/s)	
Bias		V0	0.5 × VDD V Typ.		
Rate range		I	±100 °/s	±300 °/s	
Non linearity		NL	±0.5 % FS		
Frequency response		BW	52.6 Hz Typ.		-3dB point
Cross axes		OS	±5 %		Ta=+25 °C
Current consumption		Iop	6.7 mA Typ.		VO : Output No load condition
Noise		rN	1.0 (°/s) p-p Max.	3.3 (°/s) p-p Max.	5kHz sampled at 200ms
Start-up time		TACT	300 ms Max.		

Product Name (Standard form) XV-9100 LV **.****** kHz
① ② ③
①Model ②Package type ③Frequency (not necessary to specify)

External Dimensions

(Unit:mm)

•XV-9100LV / XV-9300LV

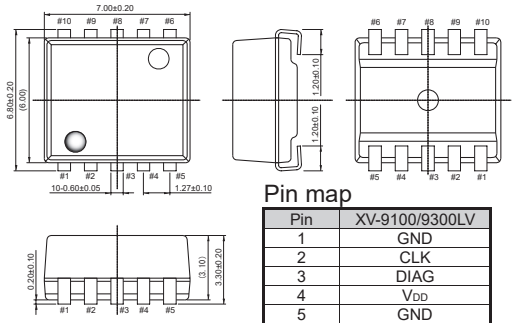

Pin map

Pin	XV-9100/9300LV
1	GND
2	CLK
3	DIAG
4	VDD
5	GND
6	N.C.
7	Vout
8	GND
9	CHECK
10	N.C.

Do not connect "N.C." pins externally devices.

•XV-9100LP / XV-9300LP

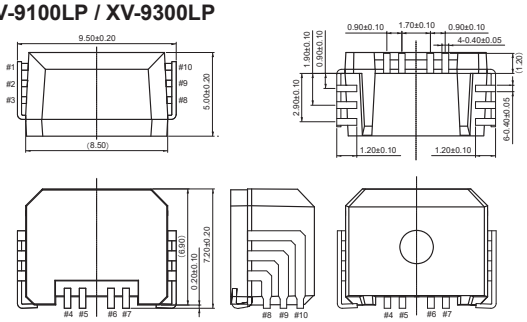

Pin map

Pin	XV-9100/9300LP
1	CHECK
2	GND
3	Vout
4	N.C.
5	N.C.
6	GND
7	GND
8	VDD
9	DIAG
10	CLK

Do not connect "N.C." pins externally devices.

Footprint (Recommended)

(Unit:mm)

•XV-9100LV
•XV-9300LV

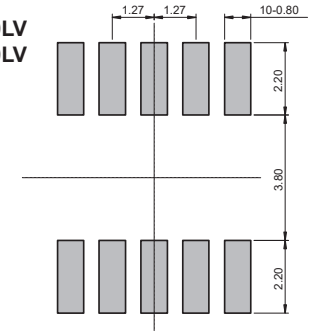

•XV-9100LP
•XV-9300LP

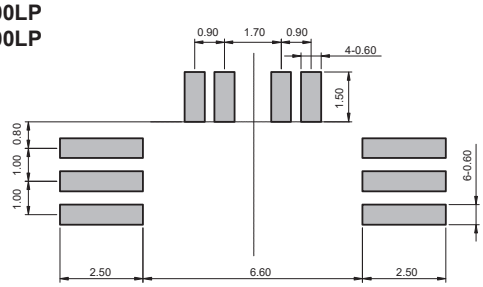

GYRO SENSOR (Digital Output)
FOR AUTOMOTIVE
XV4001BC / BD
XV4001KC / KD

For Automotive

Pb Free

RoHS Compliant

Product number
XV4001BC: X2A000201xxxx00
XV4001BD: X2A000161xxxx00
XV4001KC: X2A000211xxxx00
XV4001KD: X2A000171xxxx00

- SPI or I²C serial interface
- Angular rate output (16bit), Temperature output (11bit)
- Inclined angle: 20 degrees (XV4001KC/KD)
  XV4001BC ··· I²C / 5.0 x 3.2 x 1.3 mm
  XV4001BD ··· SPI / 5.0 x 3.2 x 1.3 mm
  XV4001KC ··· I²C / 6.0 x 4.8 x 3.3 mm
  XV4001KD ··· SPI / 6.0 x 4.8 x 3.3 mm
- Conforms to AEC-Q200

Recommended Application
- Car navigation system, Telematics

*The I2C-Bus is a trademark of NXP Semiconductors

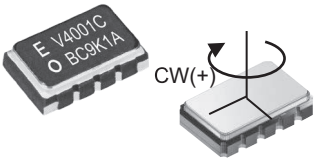

XV4001BC/BD

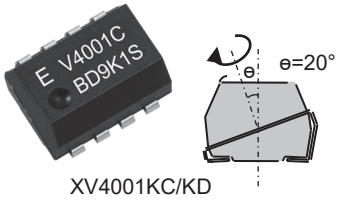

XV4001KC/KD

Specifications (characteristics)

Item		Symbol	Specifications	Conditions / Remarks
Supply Voltage		VDD	3.3 V ±0.3 V	
Temperature range	Storage Temperature	TSTG	-50 °C to +105 °C	
	Operating Temperature	TOPR	-40 °C to +85 °C	
Scale factor		So	370 LSB/(°/s) ±1.5 %	Ta=+25 °C
Bias		V0	±2 °/s (0 LSB Typ.)	Ta=+25 °C
Rate range		I	±70 °/s	
Non linearity		NL	±0.5 % FS	Ta=+25 °C
Frequency response		BW	10 Hz Typ.	LPF Gain -3dB bandwidth
Cross axes		OS	±5 %	Ta=+25 °C
Current consumption		Iop	3.5 mA Typ.	not rotation and not communicating
Noise		rN	0.05 °/s RMS Typ.	

Product Name (Standard form)
XV400 1 B C * * *
① ②③④ ⑤ ⑥ ⑦
①Model ②Detection axis (1:Z-axis) ③Package type(B: Ceramic 5032size, K: Lead frame K-Type)
④Output (C: I²C, D: SPI) ⑤Frequency ⑥,⑦Internal identification code (⑤⑥⑦ are not necessary to specify)

External Dimensions
(Unit:mm)

•XV4001BC/BD

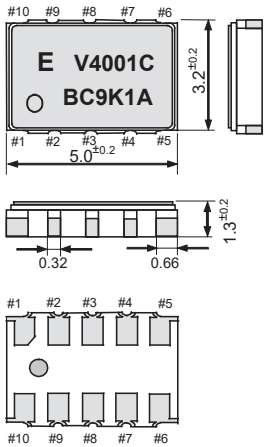

•XV4001KC/KD

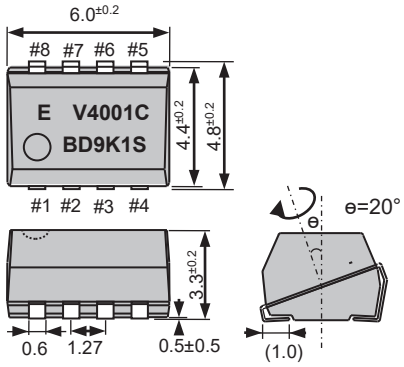

Pin map

Pin	Connection	
	XV4001BC/BD	XV4001KC/KD
1	N.C.	GND
2	SCLK SCL	MOSI
3	SS	MISO SDA
4	VDD	N.C.
5	N.C.	N.C.
6	N.C.	SCLK SCL
7	GND	SS
8	MOSI	VDD
9	MISO SDA	-
10	N.C.	-

Do not connect "N.C." pins externally.

Footprint (Recommended)
(Unit:mm)

•XV4001BC/BD

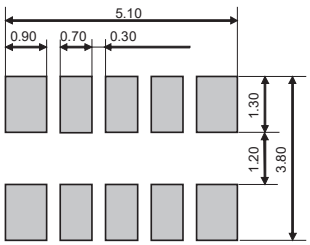

•XV4001KC/KD

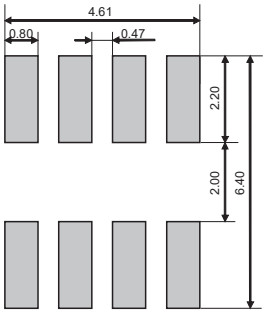

WORKING FOR EU RoHS / Pb FREE

■EU RoHS / Pb Free Products

The standard crystal products are compliant with EU RoHS directives.
The appropriate symbol is displayed on individual product pages as applicable.

Pb Free	●**Pb free.**
RoHS Compliant	●**Complies with EU RoHS directive.** ***About the products without the Pb-free mark.** **Contains Pb in products exempted by EU RoHS directive.** **(Contains Pb in sealing glass, high melting temperature type solder or other.)**

■DISTINCTIONS

Distinctions between the products with Pb plating terminals and the products that comply with EU RoHS directives.

●Plastic packaged type products.
Marking (year part lot No.) indicates as follows.

	Last digit of year	1	2	3	4	5	6	7	8	9	0
Products Complied with EU RoHS directive (Terminal Plating ; Sn-Bi or Sn-Ag)	Alphabet	A	B	C	D	E	F	G	H	J	K
Products Complied with EU RoHS directive (Terminal Plating ; Sn)	Alphabet	M	N	R	S	T	U	V	W	X	Z

●Cylinder type products
The color of glass plug will be changed as follows.

Terminal Pb Plating products	Blue or Green etc
Complies with EU RoHS directive products	Gray or White

■Terminal materials of crystal products that comply with EU RoHS directive

We will deliver products that comply with EU RoHS directives for new orders.
Sn plating of terminals is our standard for the products that offer two types of plating.
Note: * = Not recommended for new design or Discontinued products

Category	Model	Terminal Material	Terminal Plating	Complies With EU RoHS Directive	Pb Free	Remarks (Contains Pb in products exempted by RoHS directive.)	Reference weight (Typ.)
kHz Range Crystal unit	FC-12D *	Mo	Au	O	O		3.1 mg
	FC-12M	Mo	Au	O	O		5 mg
	FC-135 / FC-135R	W	Au	O		7(c) - I	11 mg
	FC-13A	Mo	Au	O	O		14 mg
	FC1610AN	Mo	Au	O	O		3 mg
	FC2012AN	Mo	Au	O	O		4.3 mg
	FC3215AN	W	Au	O	O		13 mg
	MC-146	42 Alloy	Sn or Sn-Bi	O		7(a)	29 mg
	MC-306 *	42 Alloy	Sn or Sn-Bi	O		7(a)	126 mg
	MC-30A	42 Alloy	Sn or Sn-Bi	O		7(a)	126 mg
MHz Range Crystal unit	FA1008AN	Mo	Au	O	O		0.9 mg
	FA1210AN	Mo	Au	O	O		1 mg
	FA-118T	Mo	Au	O	O		3 mg
	FA-128	W	Au	O	O		7 mg
	FA-128S *	W	Au	O	O		11 mg
	FA2016AA	W	Au	O	O		7 mg
	FA2016AN *	W	Au	O	O		6 mg
	FA1612AS	W	Au	O	O		5 mg
	FA2016AS	W	Au	O	O		8 mg
	FA2016ASA	W	Au	O	O		8 mg
	FA-20H	W	Au	O	O		11 mg
	FA-20HS *	W	Au	O	O		18 mg
	FA-238	W	Au	O	O		16 mg
	FA-238A	W	Au	O	O		16 mg
	FA-238V	W	Au	O	O		16 mg
	MA-306 *	42 Alloy	Sn or Sn-Bi	O		7(a)	124 mg
	MA-406 *	42 Alloy	Sn or Sn-Bi	O		7(a)	330 mg
	MA-505 *	42 Alloy	Sn or Sn-Bi	O		7(a)	505 mg
	MA-506 *	42 Alloy	Sn or Sn-Bi	O		7(a)	505 mg
	TSX-3225	W	Au	O	O		17 mg
SAW Resonator	FS-335 *	W	Au	O	O		56 mg
	FS-555 *	W	Au	O	O		112 mg
	NS-21R *	W	Au	O	O		13 mg
	NS-32R *	W	Au	O	O		49 mg

Category	Model	Terminal Material	Terminal Plating	Complies With EU RoHS directive	Pb Free	Remarks (Contains Pb in products exempted by RoHS directive.)	Reference weight (Typ.)
SPXO	SG2016CAN / SG2016CAA	W	Au	O	O		9.9 mg
	SG-210 STF	W	Au	O	O		12 mg
	SG-210SxBA *	W	Au	O	O		15 mg
	SG-210 SxH *	W	Au	O	O		14 mg
	SG-211 SxE *	W	Au	O	O		13 mg
	SG-3030CM *	W	Au	O	O		13 mg
	SG-3031CM	W	Au	O	O		13 mg
	SG-3031CMA	W	Au	O	O		13 mg
	SG-3030JC *	42 Alloy	Sn or Sn-Bi	O		7(a)	239 mg
	SG-3030JF *	42 Alloy	Sn or Sn-Bi	O		7(a)	90 mg
	SG-3030LC */ SG-3040LC *	42 Alloy	Sn	O		7(c) - I	25 mg
	SG2520EGN	W	Au	O	O		12 mg
	SG2520VGN	W	Au	O	O		12 mg
	SG2520EHN	W	Au	O	O		12 mg
	SG2520VHN	W	Au	O	O		12 mg
	SG3225CAN	W	Au	O	O		25 mg
	SG3225EAN / VAN	W	Au	O	O		25 mg
	SG5032CAN / CBN */ CCN	W	Au	O	O		52 mg
	SG5032EAN / VAN	W	Au	O	O		52 mg
	SG5032EEN / VEN	W	Au	O	O		165 mg
	SG-531P *	42 Alloy	Sn or Sn-Bi	O		7(a)	698 mg
	SG-615P *	42 Alloy	Sn or Sn-Bi	O		7(a)	917 mg
	SG-636 series *	42 Alloy	Sn or Sn-Bi	O		7(a)	241 mg
	SG7050CAN / CBN */ CCN	W	Au	O	O		147 mg
	SG7050EAN / VAN	W	Au	O	O		149 mg
	SG7050EBN *	W	Au	O	O		171 mg
	SG3225HBN	W	Au	O	O		26 mg
	SG7050EEN	W	Au	O	O		165 mg
	SG3225EEN	W	Au	O	O		26 mg
	SG7050VEN	W	Au	O	O		165 mg
	SG3225VEN	W	Au	O	O		26 mg
Selectable SPXO	SG-8503CA	W	Au	O	O		167mg
	SG-8504CA	W	Au	O	O		168 mg
	SG-8506CA	W	Au	O	O		167 mg
SPSO (Low-jitter SAW)	EA-2102CB	W	Au	O	O		64 mg
	EG-2001CA *	W	Au	O	O		130 mg
	EG-2002CA *	W	Au	O	O		135 mg
	EG-2021CA *	W	Au	O	O		135 mg
	EG-2101CA *	W	Au	O	O		134 mg
	EG-2102CA *	W	Au	O	O		129 mg
	EG-2102CB	W	Au	O	O		71 mg
	EG-2103CB	W	Au	O	O		71 mg
	EG-2121CA	W	Au	O	O		133 mg
	EG-2121CB	W	Au	O	O		71 mg
	EG-2123CB	W	Au	O	O		71 mg
	EG-4101CA	W	Au	O	O		140 mg
	EG-4121CA	W	Au	O	O		140 mg
	XG-1000CA *	W	Au	O	O		126 mg
	XG-1000CB *	W	Au	O	O		56 mg
	XG-2102CA	W	Au	O	O		133 mg
	XG-2103CA	W	Au	O	O		133 mg
	XG-2121CA	W	Au	O	O		133 mg
	XG-2123CA *	W	Au	O	O		133 mg
	XG5032HAN	W	Au	O	O		70 mg
Programmable	SG-8002CA *	W	Au	O	O		148 mg
	SG-8002CE *	W	Au	O	O		27 mg
	SG-8002DC *	42 Alloy	Sn or Sn-Bi	O		7(a)	699 mg
	SG-8002JA *	42 Alloy	Sn or Sn-Bi	O		7(a)	894 mg
	SG-8002JC *	42 Alloy	Sn or Sn-Bi	O		7(a)	234 mg
	SG-8101CG	W	Au	O	O		13 mg
	SG-8101CE	W	Au	O	O		25 mg
	SG-8101CB	W	Au	O	O		51 mg
	SG-8101CA	W	Au	O	O		143 mg
	SG-8018CG	W	Au	O	O		13 mg
	SG-8018CE	W	Au	O	O		25 mg
	SG-8018CB	W	Au	O	O		51 mg
	SG-8018CA	W	Au	O	O		143 mg
	SG-8101CGA	W	Au	O	O		14 mg

Category	Model	Terminal Material	Terminal Plating	Complies With EU RoHS directive	Pb Free	Remarks (Contains Pb in products exempted by RoHS directive.)	Reference weight (Typ.)
Spread Spectrum	SG-9101CG	W	Au	O	O		13 mg
	SG-9101CE	W	Au	O	O		25 mg
	SG-9101CB	W	Au	O	O		51 mg
	SG-9101CA	W	Au	O	O		143 mg
	SG-9101CGA	W	Au	O	O		14 mg
VCXO / VCSO	EV7050EAN	W	Au	O	O		163 mg
	VG7050CDN	W	Au	O	O		168 mg
	VG2520CAN *	W	Au	O	O		13 mg
	VG7050CAN *	W	Au	O	O		150 mg
	VG-4231CA *	W	Au	O	O		153 mg
	VG-4231CB *	W	Au	O	O		54 mg
	VG-4231CE	W	Au	O	O		26 mg
	VG-4232CA *	W	Au	O	O		153 mg
	VG-4501CA *	W	Au	O		7(c) - I	169 mg
	VG-4502CA *	W	Au	O		7(c) - I	164 mg
	VG-4512CA *	W	Au	O	O		168 mg
	VG-4513CA *	W	Au	O	O		162 mg
	VG-4513CB *	W	Au	O	O		65 mg
	VG3225EFN	W	Au	O	O		26 mg
	VG3225VFN	W	Au	O	O		26 mg
	VG5032EFN	W	Au	O	O		66 mg
	VG5032VFN	W	Au	O	O		66 mg
	VG7050EFN	W	Au	O	O		172mg
	VG7050VFN	W	Au	O	O		172mg
	VG5032EDN	W	Au	O	O		64 mg
	VG5032VDN	W	Au	O	O		64 mg
	VG7050EAN	W	Au	O	O		167 mg
	VG7050EBN	W	Au	O	O		166 mg
	VG7050ECN	W	Au	O	O		168 mg
TCXO	TG1612SAN	Mo	Au	O	O		4 mg
	TG1612SLN	Mo	Au	O	O		4 mg
	TG2016SAN *	Mo	Au	O	O		9.1 mg
	TG2016SMN	W	Au	O	O		8.7 mg
	TG2016SKA	W	Au	O	O		8.4 mg
	TG2016SLA	W	Au	O	O		8.4 mg
	TG7050xKN	W	Au	O	O		165 mg
	TG7050xMN	W	Au	O	O		167 mg
	TG2016SBN	W	Au	O	O		8.3 mg
	TG2520SMN	W	Au	O	O		16 mg
	TG2520SBN	W	Au	O	O		15 mg
	TG2520CEN	W	Au	O	O		16 mg
	TG3225CEN	W	Au	O	O		26 mg
	TG-5006CE	W	Au	O	O		28 mg
	TG-5006CG	W	Au	O	O		16 mg
	TG-5006CJ	Mo	Au	O	O		9.1 mg
	TG5032CFN / SFN	W	Au	O	O		71 mg
	TG5032CGN / SGN	W	Au	O	O		72 mg
	TG5032CKN / SKN	W	Au	O	O		72 mg
	TG5032SMN / CMN	W	Au	O	O		71 mg
	TG5032CAN */ SAN *	W	Au	O	O		75 mg
	TG5032CCN */ SCN *	W	Au	O	O		72 mg
	TG5032CBN */ SBN *	W	Au	O	O		75 mg
	TG5032CDN */ SDN *	W	Au	O	O		72 mg
	TG-5035CE *	W	Au	O	O		29 mg
	TG-5035CG *	W	Au	O	O		16 mg
	TG-5035CJ *	Mo	Au	O	O		9.1 mg
	TG-5500CA *	W	Au	O	O		165 mg
	TG-5501CA *	W	Au	O	O		167 mg
	TG-5510CA	W	Au	O	O		165 mg
	TG-5511CA	W	Au	O	O		167 mg
	TG-5510CB	W	Au	O	O		72 mg
	TG-5511CB	W	Au	O	O		71 mg
	TG-3541CE	W	Au	O	O		24 mg
	TG-3541CEA	W	Au	O	O		24 mg
Multi Output Oscillator	MG7050EAN */VAN */HAN *	W	Au	O	O		163 mg
Module	SR3225SAA	W	Au	O	O		24 mg

Category	Model	Terminal Material	Terminal Plating	Complies With EU RoHS directive	Pb Free	Remarks (Contains Pb in products exempted by RoHS directive.)	Reference weight (Typ.)
Real Time Clock Module	RA-4565SA	42 Alloy	Sn	O		7(a)	309 mg
	RA-4574SA *	42 Alloy	Sn	O		7(a)	289 mg
	RA4000CE	W	Au	O	O		24 mg
	RA4803SA	42 Alloy	Sn	O		7(a)	314 mg
	RA-8565SA	42 Alloy	Sn	O		7(a)	309 mg
	RA-8581SA	42 Alloy	Sn	O		7(a)	289 mg
	RA8803SA	42Alloy	Sn	O		7(a)	314 mg
	RA8000CE	W	Au	O	O		24 mg
	RA8900CE	W	Au	O	O		24 mg
	RA8900CE	W	Au	O	O		24 mg
	RA8804CE	W	Au	O	O		24 mg
	RTC-4543SA *	42 Alloy	Sn	O		7(a)	291 mg
	RTC-4574JE *	42 Alloy	Sn-Ag	O		7(a)	118 mg
	RTC-4574NB *	Cu Alloy	Sn or Sn-Ag	O		7(a)	83 mg
	RTC-4574SA	42 Alloy	Sn	O		7(a)	289 mg
	RTC-72423	42 Alloy	Sn or Sn-Bi	O		7(a)	661 mg
	RTC-7301SF *	Cu Alloy	Sn or Sn-Ag	O		7(a)	233 mg
	RTC-8564JE *	42 Alloy	Sn-Ag	O		7(a)	119 mg
	RTC-8564NB *	Cu Alloy	Sn or Sn-Ag	O		7(a)	83 mg
	RX4001CE	W	Au	O	O		24 mg
	RX4111CE	W	Au	O	O		24 mg
	RX4901CE	W	Au	O	O		24 mg
	RX-4035LC	42 Alloy	Sn	O		7(c) - I	25mg
	RX-4035SA	42 Alloy	Sn	O		7(a)	314 mg
	RX-4045NB *	Cu Alloy	Sn or Sn-Ag	O		7(a)	84 mg
	RX-4045SA	42 Alloy	Sn	O		7(a)	290 mg
	RX-4571LC	42 Alloy	Sn	O		7(c) - I	25 mg
	RX-4571NB *	Cu Alloy	Sn or Sn-Ag	O		7(a)	83 mg
	RX-4571SA	42 Alloy	Sn	O		7(a)	309 mg
	RX-4574LC *	42 Alloy	Sn	O		7(c) - I	25 mg
	RX-4581NB *	Cu Alloy	Sn or Sn-Ag	O		7(a)	84 mg
	RX-4803LC	42 Alloy	Sn	O		7(c) - I	25 mg
	RX-4803SA	42 Alloy	Sn	O		7(a)	314 mg
	RX6110SA	42 Alloy	Sn	O		7(a)	313 mg
	RX8010SJ	42 Alloy	Sn	O		7(a)	150 mg
	RX-8025NB *	Cu Alloy	Sn or Sn-Ag	O		7(a)	84 mg
	RX-8025SA	42 Alloy	Sn	O		7(a)	292 mg
	RX-8035LC	42 Alloy	Sn	O		7(c) - I	25 mg
	RX-8035SA	42 Alloy	Sn	O		7(a)	314 mg
	RX8130CE	W	Au	O	O		24 mg
	RX-8564LC	42 Alloy	Sn	O		7(c) - I	25 mg
	RX-8571LC	42 Alloy	Sn	O		7(c) - I	25 mg
	RX-8571NB *	Cu Alloy	Sn	O		7(a)	84 mg
	RX-8571SA	42 Alloy	Sn	O		7(a)	311 mg
	RX-8581JE *	42 Alloy	Sn-Ag	O		7(a)	111 mg
	RX-8581NB *	Cu Alloy	Sn or Sn-Ag	O		7(a)	84 mg
	RX-8581SA *	42 Alloy	Sn	O		7(a)	289 mg
	RX-8731LC	42 Alloy	Sn	O		7(c) - I	25 mg
	RX-8803LC	42 Alloy	Sn	O		7(c) - I	25 mg
	RX-8803SA	42Alloy	Sn	O		7(a)	314 mg
	RX8111CE	W	Au	O	O		24 mg
	RX8900CE	W	Au	O	O		24 mg
	RX8804CE	W	Au	O	O		24 mg
	RX8901CE	W	Au	O	O		24 mg
	RX8900SA	42Alloy	Sn	O		7(a)	313 mg
SAW Filter	FF-555 *	W	Au	O	O		112 mg
Sensor	XV-3500CB *	W	Au	O	O		65 mg
	XV-3510CB	W	Au	O	O		65 mg
	XV4001Bx	W	Au	O	O		68 mg
	XV4001Kx	Cu Alloy	Ni-Pd-Au	O	O		194 mg
	XV7001BB	W	Au	O	O		65 mg
	XV7011BB	W	Au	O	O		65 mg
	XV7021BB	W	Au	O	O		67 mg
	XV7081BB	W	Au	O	O		67 mg
	XV-8000CB *	W	Au	O	O		65 mg
	XV-8000LK *	Cu Alloy	Ni-Pd-Au	O	O		191 mg
	XV-9100CD	W	Au	O	O		107 mg
	XV-9100LP	Cu Alloy	Ni-Pd-Au	O	O		651 mg
	XV-9100LV	Cu Alloy	Ni-Pd-Au	O	O		317 mg
	XV-9300CD	W	Au	O	O		107 mg
	XV-9300LP	Cu Alloy	Ni-Pd-Au	O	O		651 mg
	XV-9300LV	Cu Alloy	Ni-Pd-Au	O	O		317 mg
	HTS-206 *	Fe-Ni-Co	Sn-Pb	O		7(a)	52 mg

■HANDLING PRECAUTIONS

Please use the each product under the conditions provided in respective specifications and catalogues.
The crystal products are designed and manufactured to satisfy its specification, and quality and reliability of the products are ensured through our stringent reliability tests before shipments. However, it is essential to store, mount, and use the products under proper conditions in order to keep the quality and reliability. Please pay careful attention to following precautions and use the products under the optimal conditions. We shall not be responsible for any deteriorated performance of the products caused by any application or usage of the products adopted at customer's own discretion.

■Common points for all products

1. Shock resistance

Crystal products may be damaged under some conditions, such as dropping from desks or receiving shocks during mounting. Please do not use the products if products have received any excessive shocks.

2. Radiation

Exposure to radiation can cause deterioration in performance, so avoid irradiation.

3. Chemicals / pH

Do not use or store the product in a pH range that may cause corrosion or dissolution of the materials or packaging.

4. Adhesive

Do not use an adhesive that may cause corrosion of the packing materials, terminals, components, glass materials, and vapor deposited materials used in the products. (For example, a chlorine-based adhesive may corrode the metal parts “lid” of a crystal unit to diminish the hermetic qualities, lowering the performance.)

5. Halogen Compound

Do not use products in halogen gas. Even a slight amount of halogen gas, such as that found in chlorine gas in the air or in metal parts used in the package, may corrode. Also, do not use any resin that emits halogen gas.

6. Static electricity

Excessive levels of static electricity may damage the product, please treat it in anti-static condition. Choose conductive materials for containers and packing materials. Use a soldering gun and a measurement circuit free from high-voltage leakage and provide grounding conduction when working with them.

7. When designing

7.1 The affect of mechanical vibration

While there is any given shock or mechanical vibration periodically to crystal products, such as, a piezo sounder, a piezo buzzer, and speaker, to crystal products, output frequency and amplitude can be changed. Especially the quality of telecommunication equipment could be affected by this phenomenon. Although crystal products are designed to minimize the effect of mechanical vibration, we recommend to check them in advance and to follow the PCB design guidelines as below.

7.2PCB design guidelines

(1) Ideally, the mechanical buzzer source should be mounted on a separate PCB from the crystal device. It is advisable to use cushion or cutting PCB, if you mount on same PCB. Traveling mechanical vibration differs when applied to the PCB only vs. inside the body. It is advisable to confirm characteristics in the body.
(2) Refer to the recommend footprint when designing.
(3) In case of using solder flux, please use it on the basis of the flux of the JIS standard (JIS C 60068-2-20/IEC 60,068-2-20).
(4) Please use the solder on the basis of the JIS standard (JIS Z 3282, Pb content 1000ppm, 0.1wt% or less) lead -free solder.

8. Notes on storage

(1) Storing the crystal products under higher or lower temperature or high humidity for a long period may affect frequency stability or solderability. Please store the crystal products at the normal temperature and humidity, avoid storing them for a long period and mount them as soon as possible after unpacking.
Normal temperature and humidity:
Temp,+15 °C to+35 °C, humidity 25 % RH to 85 % RH
(2) Please carefully handle the inner and outer boxes and reel. External pressure may cause deformation of reel and tape.

9. Mounting precautions

9.1 Soldering heat resistance

The crystal products except SMD products use solder having a +180°C to +200°C melting point. Heating up the package more than +150°C may deteriorate the characteristics or damage the products. If the crystal products need to be soldered at temperature of more than +150°C, SMD products are recommended. Using higher temperatures over the following reflow conditions to crystal products, even SMD products, may cause the characteristics to deteriorate. The reflow conditions within following profile are recommended. Always check the soldering temperature and time before mounting these products. Also, please check them again when the mounting conditions are changed. Please contact us for inquiries about heat-resistance if crystal products need to be soldered over the following profile.

(1) Cylinder products and DIP products

Note: * = Not recommended for new design or Discontinued products

Model	Soldering conditions
[Cylinder] HTS-206 *	+280 °C or under @ Max. 5 s. Do not heat the package at more than +150 °C.
[DIP] SG- 531P *, SG-8002 DC *	+260 °C or under @ Max.10 s. Do not heat the package at more than +150 °C.

(2) SMD products Reflow profile (example)

The availability of the heat resistance for reflow conditions of JEDEC-STD-020D.01 is judged individually. Please inquire it.

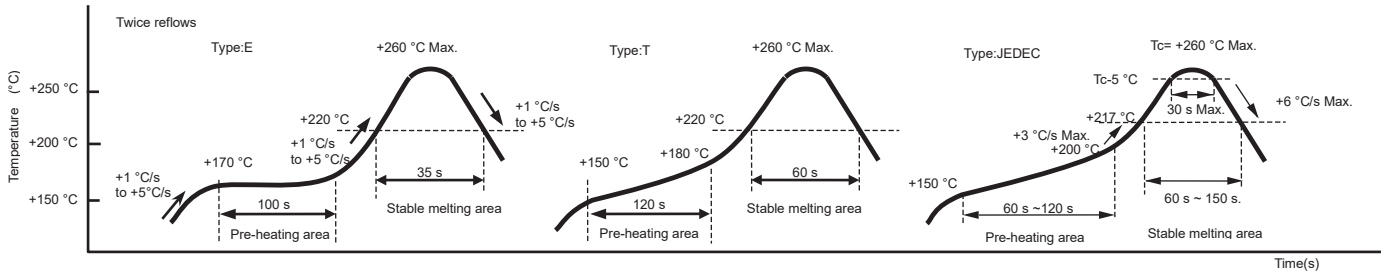

Please make temperature rate as gentle a curve as possible.
Note: * = Not recommended for new design or Discontinued products

Category	Model	Type:E	Type:JEDEC	Remarks
kHz Range Crystal unit	FC3215AN		√	
	FC2012AN		√	
	FC-12D *		√	
	FC-12M		√	
	FC-135/ FC-135R	√	Please contact us	
	FC-13A	√	Available	
	FC1610AN		√	
	MC-146	√	Please contact us	
	MC-306 *	√	Available	
	MC-30A	√	Available	
	MC-405 *	√	Available	
	MC-406 *	√	Available	
MHz Range Crystal unit	FA1210AN		√	
	FA1008AN		√	
	FA-118T		√	
	FA-128		√	
	FA-128S *		√	
	FA2016AA		√	
	FA2016AN *		√	
	FA-20H		√	
	FA1612AS		√	
	FA2016AS		√	
	FA-20HS *		√	
	FA-238	√	Available	
	FA-238A	Available	√	
	FA-238V	√	Available	
	MA-306 *	√	Please contact us	
	MA-406 *	√	Available	Tc=+250 ºC
	MA-505 *	√	Available	Tc=+250 ºC
	MA-506 *	√	Available	Tc=+250 ºC
	TSX-3225		√	
SAW Resonator	NS-21R *		√	
	NS-32R *	√	Available	
	FS-335 *	√	Please contact us	
	FS-555 *	√	Please contact us	
SPXO	SG2520EGN/ VGN		√	
	SG2520EHN/ VHN		√	
	SG2016CAN/ CAA		√	
	SG-210 series *		√	
	SG-211S*E *		√	
	SG-3030CM *		√	
	SG-3030LC */ JF */ JC *	√	Please contact us	
	SG-3040 series *	√	Please contact us	
	SG-310 series *		√	
	SG3225CAN		√	
	SG3225EAN/ VAN/ EEN/ VEN		√	
	SG5032CAN/ CBN */ CCN		√	
	SG5032EAN/ VAN		√	
	SG5032EEN/ VEN		√	
	SG-615P *	√	Available	Tc=+245 ºC
	SG-636 series *	√		
	SG7050CAN/ CBN */ CCN		√	
	SG7050EAN/ VAN/ EEN/ VEN		√	
	SG7050EBN *		√	
	SG3225HBN		√	
Selectable SPXO	SG-8503CA		√	
	SG-8504CA		√	
	SG-8506CA		√	

√ : Standard Spec.

Category	Model	Type:E	Type:JEDEC	Remarks
SPSO (Low-jitter SAW)	EA-2102CB		√	
	EG-2001CA *		√	
	EG-2002CA *		√	
	EG-2021CA *		√	
	EG-2101CA *		√	
	EG-2102CA *		√	
	EG-2102CB		√	
	EG-2103CB		√	
	EG-2121CA		√	
	EG-2121CB		√	
	EG-2123CB		√	
	EG-4101CA		√	
	EG-4121CA		√	
	XG-1000CA *		√	
	XG-1000CB *		√	
	XG-2102CA		√	
	XG-2103CA		√	
	XG-2121CA		√	
	XG-2123CA *		√	
	XG5032HAN		√	
Programmable	SG-8002CA */ CE *	√	Available	
	SG-8002JA *	√	Available	Tc=+245 ºC
	SG-8002JC *	√		
	SG-8101CA/ CB/ CE/ CG		√	
	SG-8018CA/ CB/ CE/ CG		√	
	SG-8101CGA		√	
Spread Spectrum	SG-9101CA/ CB/ CE/ CG		√	
	SG-9101CGA		√	
VCXO / VCSO	EV7050EAN		√	
	VG7050CDN		√	
	VG2520CAN *		√	
	VG7050CAN *		√	
	VG-4231CA *	√	Available	
	VG-4231CB *		√	
	VG-4231CE		√	
	VG-4232CA *		√	
	VG-4501CA * / VG-4502CA *		√	
	VG-4512CA *		√	
	VG-4513CA */ CB *		√	
	VG5032EDN / VDN		√	
	VG7050EAN/ EBN/ ECN		√	
	VG3225/ 5032/ 7050EFN		√	
	VG3225/ 5032/ 7050VFN		√	
TCXO	TG1612SAN		√	
	TG2016SAN *		√	
	TG2016SMN		√	
	TG2016SBN		√	
	TG2520SMN		√	
	TG2520SBN		√	
	TG2520CEN		√	
	TG3225CEN		√	
	TG-5006CE		√	
	TG-5006CG		√	
	TG-5006CJ		√	
	TG5032CKN /SKN		√	
	TG5032CMN /SMN		√	
	TG7050CKN /SKN		√	
	TG7050CMN /SMN		√	
	TG5032CGN/ SGN/ CFN/ SFN		√	
	TG5032CAN */ CBN */ CCN */ CDN *		√	
	TG5032SAN */ SBN */ SCN */ SDN *		√	
	TG-5035CE *		√	
	TG-5035CG *		√	
	TG-5035CJ *		√	
	TG-5500CA *		√	
	TG-5501CA *		√	
	TG-5510CA		√	
	TG-5511CA		√	
	TG-5510CB		√	
	TG-5511CB		√	
	TG-3541CE		√	
	TG-3541CEA		√	

√ : Standard Spec.

Category	Model	Type:E	Type:JEDEC	Remarks
Multi output Oscillator	MG7050 series *		√	
OCXO	OG1409CAN *		√	Tc=+245 ºC 1 time
Module	SR3225SAA		√	

√ : Standard Spec.

Category	Model	Type:E	Type:JEDEC	Remarks
Real Time Clock Module	RA-4565SA		√	Tc=+250 ºC
	RA-4574SA *	√	Please contact us	Tc=+250 ºC
	RA4803SA		√	Tc=+250 ºC
	RA-8565SA		√	Tc=+250 ºC
	RA-8581SA	√	Please contact us	Tc=+250 ºC
	RA8803SA		√	Tc=+250 ºC
	RA4000CE		√	
	RA8000CE		√	
	RA8900CE		√	
	RA8804CE		√	
	RTC-4543SA *	√	Please contact us	Tc=+250 ºC
	RTC-4574JE *	√	Please contact us	
	RTC-4574NB *	√	Please contact us	
	RTC-4574SA	√	Please contact us	Tc=+250 ºC
	RTC-72423 *	√	Please contact us	Tc=+245 ºC
	RTC-7301SF *	√	Please contact us	
	RTC-8564JE *	√	Please contact us	
	RTC-8564NB *	√	Please contact us	
	RX-4035LC		√	
	RX-4035SA		√	
	RX-4045NB *	√	Please contact us	
	RX-4045SA	√	Please contact us	Tc=+250 ºC
	RX-4571LC		√	
	RX-4571NB *		√	
	RX-4571SA		√	Tc=+250 ºC
	RX-4574LC	√	Please contact us	
	RX-4581NB *	√	Please contact us	
	RX-4803LC		√	
	RX-4803SA		√	Tc=+250 ºC
	RX6110SA		√	Tc=+250 ºC
	RX8010SJ		√	Tc=+250 ºC
	RX-8025NB *	√	Please contact us	
	RX-8025SA	√	Please contact us	Tc=+250 ºC
	RX-8035LC		√	
	RX-8035SA		√	
	RX8130CE		√	
	RX-8564LC	√	Please contact us	
	RX-8571LC		√	
	RX-8571NB *		√	
	RX-8571SA		√	Tc=+250 ºC
	RX-8581JE *	√	Please contact us	
	RX-8581SA *	√	Please contact us	Tc=+250 ºC
	RX-8731LC		√	
	RX-8803LC		√	
	RX-8803SA		√	Tc=+250 ºC
	RX4901CE		√	
	RX8901CE		√	
	RX8804CE		√	
	RX8900CE		√	
	RX8900SA		√	Tc=+250 ºC
SAW Filter	FF-555 *	√	Please contact us	

√ : Standard Spec.

Category	Model	Type:E	Type:JEDEC	Remarks
Sensor	XV-3500CB */ XV-3510CB		√	
	XV-3900CB *		√	
	XV4001Bx		√	
	XV4001Kx		√	
	XV7001BB		√	
	XV7011BB		√	
	XV7081BB		√	
	XV7021BB		√	
	XV-8000CB *		√	
	XV-8000LK *		√	
	XV-9100CD		√	
	XV-9100LP		√	Tc=+250 ºC
	XV-9100LV		√	Tc=+250 ºC
	XV-9300CD		√	
	XV-9300LP		√	Tc=+250 ºC
	XV-9300LV		√	Tc=+250 ºC

√ : Standard Spec.

9.2 Shocks by auto mounting

Shocks caused by auto mounting and vacuuming may deteriorate the characteristics and affect the products. Please set the mounting conditions to minimize the shocks as much as possible, and be sure that there is no affect on the characteristics before mounting. Please review the conditions after the conditions are changed. Also please be sure that crystal products don't hit machines or other electric boards, etc. before or after mounting.

9.3 Notes for each package type

(1) Ceramic package products and SON products

Bending the board after soldering ceramic package products and SON products (MC-146,RTC-****NB,RX-****NB) may cause peeling off portions of soldering or package cracks by mechanical stress. Particularly, in the case of cutting boards after soldering these products, please be sure to layout the crystal on a less stressed location and use less stressed cutting method.

(2) Ceramic package products

In the case of soldering ceramic package products on a different expansion-coefficient board (ex. Epoxy Glass), soldering crack at the foot pattern would be expected under repeated temperature changes for a long period. Under these conditions, be sure to check the solderability in advance.

(3)Cylinder products

Bending the lead on the glass or pulling the lead strongly may cause cracking of the hermetic seal glass at the root of the lead and may cause the airtightness and the characteristics to deteriorate. When the lead of crystal products need to be bent as in the figure below, leave more than 0.5 mm of lead from the case and hold the lead to prevent the lead from cracks. When the lead needs to be repaired, do not pull it, and hold the bent part to correct it. Giving undue pressure on this portion of hermetic seal may cause the airtightness to deteriorate. Please avoid applying pressure. Gluing the case of products on the electric board is recommended to prevent the airtightness from deteriorating.

● Installation example

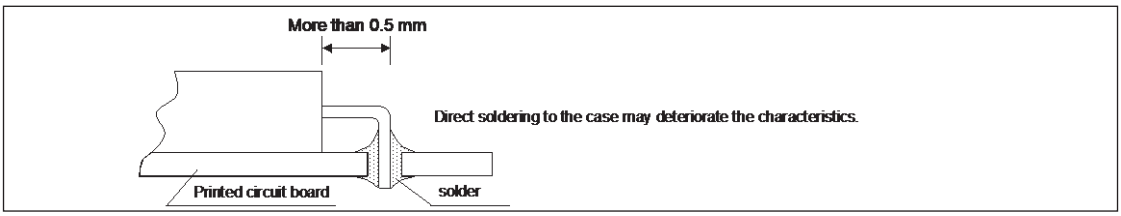

(4)DIP products and Pin type OCXO

Deformed leads cannot be inserted into board holes. Avoid applying stress sufficient to deform leads.

(5)SOJ Products and SOP products

Please avoid applying stress sufficient to deform the leads. Deformed leads may cause incorrect soldering. Particularly SOP products need to be handled with the greatest care.

9.4 Ultrasonic cleaning

(1)Products using AT-cut crystal and SAW resonator/filter can be cleaned by ultrasonic methods. But under some conditions, the crystal characteristics may be affected and internal wiring may be damaged. Please be sure to check the suitability of your system in advance.

(2)Products using tuning-fork crystals, gyro sensors and OCXOs cannot be guaranteed if cleaned using ultrasonic methods, because crystal may be destroyed.

(3)Do not wash open-type products.

(4)With washable products, avoid the use of cleaners or solvents that may negatively affect the product.

(5) By solder flux residual moisture absorption and solidification, it may course of migration etc. So, it may affect the reliability and quality of the product negatively. Please clean up the residue of flux and dry the PCB.

10. Handling

Do not touch the surface of IC directly with tweezers or any hard tools, jigs.

11. Use environment (temperature and humidity)

Please use the products within rating temperature range in concern temperature distribution in body and seasonal changes. In high humidity environment, it may cause malfunction caused by the dew condensation. Please prevent dew condensation.

■Crystal unit / Resonator

1. Drive level

Applying excessive drive level to the crystal units may cause deterioration of characteristics or damage. Circuit design must be such as to maintain a proper drive level.(refer to page “Drive level”)

2. Negative resistance

Unless adequate negative resistance is allocated in the oscillation circuit, oscillation or oscillation start up time may increase (refer to page “Allowance for Oscillation”.)

3. Load capacitance

Differences in the load capacitance in the oscillation circuit may result in deviations in the oscillation frequency from the desired frequency. Attempting to tune by force may merely cause abnormal oscillation. Before use, please specify the load capacitance of the oscillation circuit.(refer to page ”Load capacitance”)

■ Crystal Oscillator and real time clock module

All crystal oscillators and real time clock modules are provided with an IC.

1. Noise

Applying excessive level of extraneous noise to power source or input terminal may cause latch up or spurious phenomenon, which results in malfunction and breakdown.

2. Power supply line

Line impedance of a power supply should be as low as possible.

3. Output Load

It is recommended that output load is installed as close as possible to an oscillator (within 20 mm).

4. Treatment of unused input terminals

Unused pins that are left open may collect noise, thereby resulting in malfunction. Also, power consumption may increase when both P-channel and N-channel are turned on, therefore connect unused input terminals to VCC or GND.

5. Heat impact

Repeated large changes in temperature may degrade the characteristics of a deteriorated crystal unit and cause breakage of wires inside the plastic mold. This must be avoided.

6. Mounting direction

Incorrect mounting of the oscillator may cause malfunction and breakdown, so please check the mounting direction when installing.

7. Power on

It is not recommended to power on from intermediate electric potential and / or extreme fast power on. Powering on under such conditions may cause no oscillation and / or malfunction.

■ Sensing device

1. Interference between the sensors

The crystal sensor may catch the interference by board vibration and power supply common impedance.

2. Protection against vibration

Please consider about protection against vibration when the crystal sensor is operated in vibration condition.

■PRECAUTIONS IN DESIGNING OSCILLATION CIRCUITS

1. Drive level

Drive level denotes electric power required to oscillate a crystal unit, which can be calculated using the following formula.

Drive level (P) = i^2 • Re

Where i stands for current to pass in the crystal unit, Re for effective resistance of crystal unit, and $Re=R_1(1+Co/C_L)^2$.
If the Drive level (P) exceeds the specified level, oscillation frequency will shift. This occurs because an excessive level of power causes stress for the crystal and, consequently, temperature rises. If excessive drive level of power is applied to the crystal unit, this may deteriorate or damage the characteristics.

Equivalent circuit of crystal unit

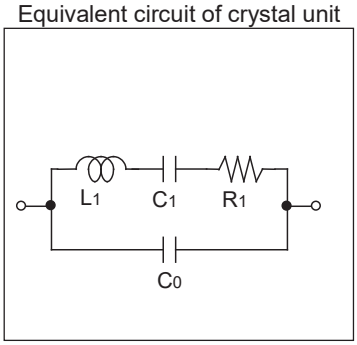

Oscillation circuit

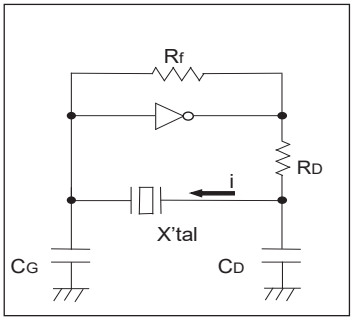

2. Allowance for oscillation

Unless adequate negative resistance is allocated in the oscillation circuit, oscillation start-up time may be increased, or No oscillation may occur. In order to avoid this, provide enough negative resistance in the circuitry design.

●Crystal unit and Oscillator

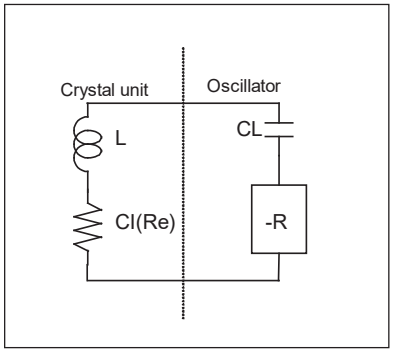

●Check of Negative resistance

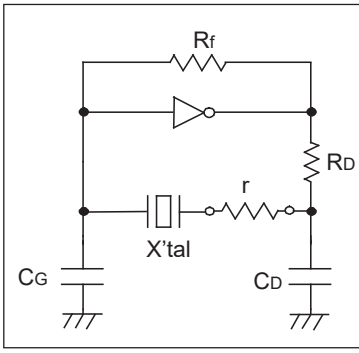

1. Connect the resistance (r) to the circuit in series with the crystal unit.
2. Adjust (r) so that oscillation can start (or stop).
3. Measure (r) when oscillation just starts (or stops) in (2) above.
4. Recommended (r)

   (r) > CI ×(5 to 10)

3. Load capacitance

Differences in the load capacitance of the oscillation circuit may result in a different oscillation frequency from the desired one, as shown in the figure below. Approximate expression of the load capacitance of the circuit CL≒ CG × CD / (CG+CD)+CS.
Where CS stands for stray Capacity of the circuit.

● Frequency and load capacitance characteristics

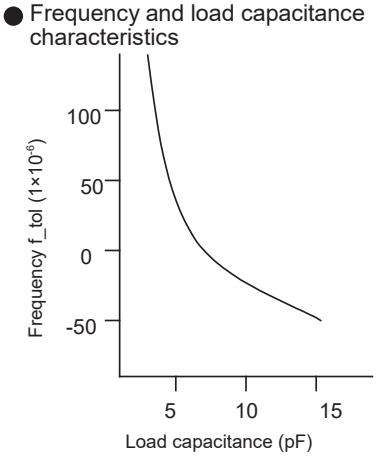

●Reference for setting parameters of oscillation circuit

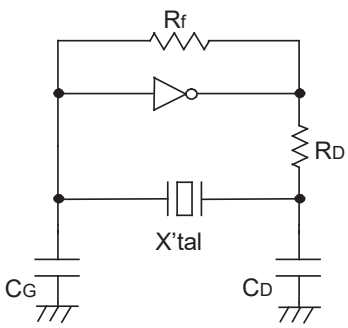

Symbol / Frequency range	Rf (MΩ)	RD (kΩ)	CG (pF)	CD (pF)
20 kHz to 60 kHz	20	500	10	10
60 kHz to 165 kHz	10	300	10	10
5.5 MHz to 30 MHz (Fundamental)	1	0.5	5～15	5～15
30 MHz～50 MHz (Fundamental)			5～10	5～10

IC: equivalent to TC74HCU04 (Unbuffer)
IC: equivalent to TC74VHCU04 (Unbuffer) (30 MHz to 50 MHz)
(TC74HCU04 and TC74VHCU04 are product number of Toshiba Corp.)

PACKING SPECIFICATIONS

For SMD products, recommendation packing quantity is specified as below table. Please order in accordance with packing quantity.

Note: * = Not recommended for new design or Discontinued products

1. Cylinder

Cylinder products are packed in vinyl bags per lot of 250 to 1000pcs.
From 1 to 20 bags are then placed in inner boxes to make a lot.
Inner boxes are then placed in cartons for shipment. (the quantity varies with the model.)

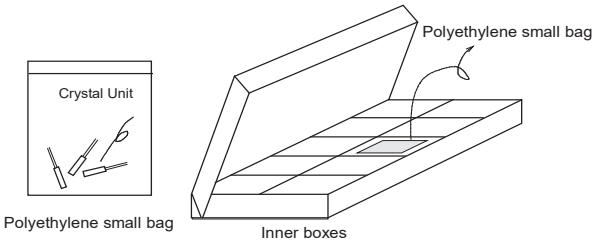

Model	Quantity
HTS-206 *	500 pcs / vinyl bags

2. DIP

DIP products are placed into antistatic IC tubes and packed into boxes for shipment.

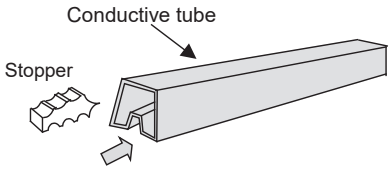

Model	Quantity
SG-531 * SG-8002DC *	35 pcs / tube

3. SMD

SMD products are packed in the shipping carton as below table in accordance with taping standards EIA-481 and IEC-60286.

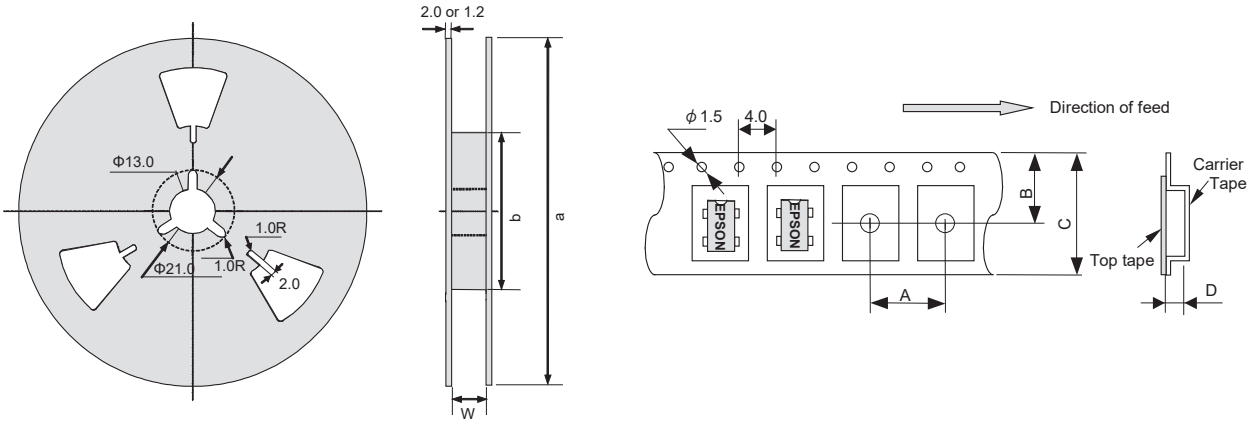

RECOMMENDATION PACKING QUANTITY and DIMENSION (Unit: mm)

Note: * = Not recommended for new design or Discontinued products

●Crystal unit

Model	Quantity (pcs/Reel)	Reel dimension			Career Tape dimension				Direction of feed (L=left direction)
		a	b	W	A	B	C	D	
kHz Range Crystal unit									
FC3215AN	3000	Φ180	Φ60	9	4	5.25	8	1	L
FC2012AN	5000	Φ180	Φ60	9	4	5.25	8	0.75	L
FC-12D *	6000	Φ180	Φ60	9	4	5.25	8	0.45	L
FC-12M	5000	Φ180	Φ60	9	4	5.25	8	0.75	L
FC-135/ FC-135R	3000	Φ180	Φ60	13	4	7.25	12	1	L
FC-13A	3000	Φ180	Φ60	13	4	7.25	12	1	L
FC1610AN	5000	Φ180	Φ60	9	4	5.25	8	0.65	L
MC-146	9000	Φ330	Φ80 or Φ100	17	4	9.25	16	1.6	L
MC-306 *	3000	Φ330	Φ80 or Φ100	17.5	8	9.25	16	2.7	L
MC-30A	3000	Φ330	Φ80 or Φ100	17.5	8	9.25	16	2.7	L
MHz Range Crystal unit									
FA1008AN	6000	Φ180	Φ60	9	4	5.25	8	0.35	L
FA1210AN	6000	Φ180	Φ60	9	4	5.25	8	0.45	L
FA-118T	6000	Φ180	Φ60	9	4	5.25	8	0.5	L
FA-128	5000	Φ180	Φ60	9	4	5.25	8	0.7	L
FA-128S *	4000	Φ180	Φ60	9	4	5.25	8	1.0	L
FA2016AA	5000	Φ180	Φ60	9	4	5.25	8	0.7	L
FA2016AN *	5000	Φ180	Φ60	9	4	5.25	8	0.7	L
FA2016AS	3000	Φ180	Φ60	9	4	5.25	8	0.7	L
FA2016ASA	3000	Φ180	Φ60	9	4	5.25	8	0.7	L
FA-20H	5000	Φ180	Φ60	9	4	5.25	8	0.75	L
FA1612AS	5000	Φ180	Φ60	9	4	5.25	8	0.7	L
FA-20HS *	3000	Φ180	Φ60	9	4	5.25	8	1.15	L
FA-238	4000	Φ180	Φ60	9	4	5.25	8	1.05	L
FA-238A	4000	Φ180	Φ60	9	4	5.25	8	1.05	L
FA-238V	4000	Φ180	Φ60	9	4	5.25	8	1.05	L
MA-306 *	3000	Φ330	Φ80 or Φ100	17.5	8	9.25	16	2.7	L
MA-406 *	1000	Φ330	Φ80 or Φ100	25.5	12	13.25	24	4	L
MA-505 *	1000	Φ330	Φ80 or Φ100	25.5	12	13.25	24	4.8	L
MA-506 *	1000	Φ330	Φ80 or Φ100	25.5	12	13.25	24	4.8	L
TSX-3225	4000	Φ180	Φ60	9	4	5.25	8	1	L

●SAW Resonator

FS-335 *	4000	Φ330	Φ80 or Φ100	13.5	8	7.25	12	1.52	R
FS-555 *	4000	Φ330	Φ80 or Φ100	13.5	8	7.25	12	2	R
NS-21R *	3000	Φ180	Φ60	9	4	5.25	8	1.15	L
NS-32R *	4000	Φ330	Φ80 or Φ100	13.5	8	7.25	12	1.52	R

●SPXO

SG2520EGN/ VGN	2000	Φ180	Φ60	9	4	5.25	8	1.15	L
SG2520EHN/ VHN	2000	Φ180	Φ60	9	4	5.25	8	1.15	L
SG2016CAN / SG2016CAA	3000	Φ180	Φ60	9	4	5.25	8	1	L
SG-210 series	3000	Φ180	Φ60	9	4	5.25	8	1.15	L
SG-211 series *	3000	Φ180	Φ60	9	4	5.25	8	1.15	L
SG-3030CM *	3000	Φ180	Φ60	13	4	7.25	12	1	L
SG-3031CM	3000	Φ180	Φ60	13	4	7.25	12	1	L
SG-3031CMA	3000	Φ180	Φ60	13	4	7.25	12	1	L
SG-3030JC *	1000	Φ330	Φ80 or Φ100	17.5	8	9.25	16	3.3	L
SG-3030JF *	1000	Φ254	Φ100	17.5	8	9.25	16	2.3	L
SG-3030LC *	2000	Φ180	Φ60	13	4	7.25	12	1.45	L
SG-3040LC *	2000	Φ180	Φ60	13	4	7.25	12	1.45	L
SG3225 series	2000	Φ180	Φ60	9	4	5.25	8	1.4	L
SG5032 series *	1000	Φ180	Φ60	13	8	7.25	12	1.4	L
SG7050EEN/ VEN	1000	Φ180	Φ60	17	8	9.25	16	2.1	L
SG7050 series *	1000	Φ254	Φ100	17.5	8	9.25	16	2.1	L
SG-615P *	1000	Φ330	Φ80 or Φ100	25.5	12	13.25	24	4.8	L
SG-636 series *	1000	Φ330	Φ80 or Φ100	17.5	8	9.25	16	3	L
SG-850xCA	1000	Φ180	Φ60	17	8	9.25	16	2.1	L

●SPSO(Low-Jitter SAW)

EA-2102CB *	1000	Φ180	Φ60	13	8	7.25	12	1.7	L
EG-21xxCB *	1000	Φ180	Φ60	13	8	7.25	12	1.7	L
EG-2xxxCA *	1000	Φ180	Φ60	17	8	9.25	16	2.1	L
EG-4101CA *	1000	Φ180	Φ60	17	8	9.25	16	2.1	L
EG-4121CA *	1000	Φ180	Φ60	17	8	9.25	16	2.1	L
XG-1000CA *	1000	Φ180	Φ60	17	8	9.25	16	2.1	L
XG-1000CB *	1000	Φ180	Φ60	13	8	7.25	12	1.7	L
XG-21xxCA *	1000	Φ180	Φ60	17	8	9.25	16	2.1	L
XG5032HAN *	1000	Φ180	Φ60	13	8	7.25	12	1.7	L

●**Programmable & Spread Spectrum**

Model	Quantity (pcs/Reel)	Reel dimension			Career Tape dimension				Direction of feed (L=left direction)
		a	b	W	A	B	C	D	
SG-8002CA */ SG-8101CA/ SG-8018CA	1000	Φ254	Φ100	17.5	8	9.25	16	2.3	L
SG-8002CE */ SG-8101CE/ SG-8018CE	2000	Φ180	Φ60	9	4	5.25	8	1.4	L
SG-8101CB/ SG-8018CB	1000	Φ180	Φ60	13	8	7.25	12	1.4	L
SG-8002JA *	1000	Φ330	Φ80 or Φ100	25.5	12	13.25	24	4.8	L
SG-8002JC *	1000	Φ330	Φ80 or Φ100	17.5	8	9.25	16	3.3	L
SG-8101CG SG-8018CG/ SG-8101CGA	3000	Φ180	Φ60	9	4	5.25	8	1.15	L
SG-9101CA	1000	Φ254	Φ100	17.5	8	9.25	16	2.3	L
SG-9101CB	1000	Φ180	Φ60	13	8	7.25	12	1.4	L
SG-9101CE	2000	Φ180	Φ60	9	4	5.25	8	1.4	L
SG-9101CG/ SG-9101CGA	3000	Φ180	Φ60	9	4	5.25	8	1.15	L

●**VCXO/VCSO**

EV7050EAN	1000	Φ180	Φ60	17	8	9.25	16	2.1	L
VG2520CAN *	3000	Φ180	Φ60	9	4	5.25	8	1.15	L
VG7050CDN	1000	Φ180	Φ60	17	8	9.25	16	2.1	L
VG7050CAN *	1000	Φ254	Φ100	17.5	8	9.25	16	2.3	L
VG-4231CA *	1000	Φ254	Φ100	17.5	8	9.25	16	2.3	L
VG-4231CB	1000	Φ180	Φ60	13	8	7.25	12	1.4	L
VG-4231CE	2000	Φ180	Φ60	9	4	5.25	8	1.4	L
VG-4232CA *	1000	Φ254	Φ100	17.5	8	9.25	16	2.3	L
VG-45xxCA *	1000	Φ180	Φ60	17	8	9.25	16	2.1	L
VG-4513CB *	1000	Φ180	Φ60	13	8	7.25	12	1.4	L
VG3225EFN/ VG3225VFN	2000	Φ180	Φ60	9	4	5.25	8	1.4	L
VG5032EFN/ VG5032VFN	1000	Φ180	Φ60	13	8	7.25	12	1.4	L
VG7050EFN/ VG7050VFN	1000	Φ180	Φ60	17	8	9.25	16	2.1	L
VG5032EDN * / VDN *	1000	Φ180	Φ60	13	8	7.25	12	1.4	L
VG7050EAN/EBN/ECN	1000	Φ180	Φ60	17	8	9.25	16	2.1	L

●**TCXO**

TG1612SLN	3000	Φ180	Φ60	9.4	4	5.25	8	1.15	L
TG2016SLN	3000	Φ180	Φ60	9.4	4	5.25	8	1.15	L
TG2016SAN *	12000	Φ330	Φ100	9.4	4	5.25	8	1	L
TG2016SBN/ TG2016SMN	12000	Φ330	Φ100	9.4	4	5.25	8	1	L
TG2520SBN/ TG2520SMN	10000	Φ330	Φ100	9.4	4	5.25	8	1.15	L
TG7050xKN/ TG7050xMN	1000	Φ180	Φ60	17	8	9.25	16	2	L
TG2520CEN	10000	Φ330	Φ100	9.4	4	5.25	8	1.15	L
TG3225CEN	2000	Φ180	Φ60	9	4	5.25	8	1.4	L
TG-50xxCE *	2000	Φ180	Φ60	9	4	5.25	8	1.4	L
TG-50xxCG *	10000	Φ330	Φ100	9.4	4	5.25	8	1.15	L
TG-5035CG * (AEC-Q200)	2000	Φ180	Φ60	9.4	4	5.25	8	1.15	L
TG-50xxCJ *	12000	Φ330	Φ100	9.4	4	5.25	8	1	L
TG5032CFN/SFN	1000	Φ180	Φ60	13	8	7.25	12	1.4	L
TG5032CKN/SKN	1000	Φ180	Φ60	13	8	7.25	12	1.4	L
TG5032CMN/SMN	1000	Φ180	Φ60	13	8	7.25	12	1.4	L
TG5032CGN/SGN	1000	Φ180	Φ60	13	8	7.25	12	1.4	L
TG5032CAN/SAN *	1000	Φ180	Φ60	13	8	7.25	12	1.4	L
TG5032CBN/SBN *	1000	Φ180	Φ60	13	8	7.25	12	1.4	L
TG5032CCN/SCN *	1000	Φ180	Φ60	13	8	7.25	12	1.4	L
TG5032CDN/SDN *	1000	Φ180	Φ60	13	8	7.25	12	1.4	L
TG-5500CA *	1000	Φ254	Φ100	17.5	8	9.25	16	2.3	L
TG-5501CA *	1000	Φ180	Φ60	17	8	9.25	16	2	L
TG-5510CB	1000	Φ180	Φ60	13	8	7.25	12	1.4	L
TG-5511CB	1000	Φ180	Φ60	13	8	7.25	12	1.4	L
TG-5510CA/ TG-5511CA	1000	Φ180	Φ60	17	8	9.25	16	2	L
TG-3541CE/ TG3541CEA	2000	Φ180	Φ60	9	4	5.25	8	1.4	L

●**Multi output oscillator**

MG7050 series *	1000	Φ180	Φ60	17	8	9.25	16	2.1	L

●**Module**

SR3225SAA	3000	Φ180	Φ60	9	4	5.25	8	1.4	L

●**Real Time Clock Module**

Model	Quantity (pcs/Reel)	Reel dimension			Career Tape dimension				Direction of feed (L=left direction)
		a	b	W	A	B	C	D	
RA-4565SA	1000	Φ330	Φ80 or Φ100	17.5	12	9.25	16	3.65	L
RA-4574SA *	1000	Φ330	Φ80 or Φ100	17.5	12	9.25	16	3.65	L
RA4803SA	1000	Φ330	Φ80 or Φ100	17.5	12	9.25	16	3.65	L
RA-8565SA	1000	Φ330	Φ80 or Φ100	17.5	12	9.25	16	3.65	L
RA-8581SA	1000	Φ330	Φ80 or Φ100	17.5	12	9.25	16	3.65	L
RA8803SA	1000	Φ330	Φ80 or Φ100	17.5	12	9.25	16	3.65	L
RTC-4543SA *	1000	Φ330	Φ80 or Φ100	17.5	12	9.25	16	3.65	L
RTC-4574JE *	1000	Φ330	Φ80 or Φ100	17.5	12	9.25	16	2	L
RTC-4574NB *	1000	Φ330	Φ80 or Φ100	17.5	12	9.25	16	1.8	L
RTC-4574SA	1000	Φ330	Φ80 or Φ100	17.5	12	9.25	16	3.65	L
RTC-72423	1000	Φ330	Φ80 or Φ100	25.5	16	13.25	24	2.95	L
RTC-7301SF *	1000	Φ330	Φ80 or Φ100	17.5	12	9.25	16	2.4	L
RTC-8564JE *	1000	Φ330	Φ80 or Φ100	17.5	12	9.25	16	2	L
RTC-8564NB *	1000	Φ330	Φ80 or Φ100	17.5	12	9.25	16	1.8	L
RX-4035LC	2000	Φ180	Φ60	13	4	7.25	12	1.45	L
RX-4035SA	1000	Φ330	Φ80 or Φ100	17.5	12	9.25	16	3.65	L
RX-4045NB *	1000	Φ330	Φ80 or Φ100	17.5	12	9.25	16	1.8	L
RX-4045SA	1000	Φ330	Φ80 or Φ100	17.5	12	9.25	16	3.65	L
RX-4571LC	2000	Φ180	Φ60	13	4	7.25	12	1.45	L
RX-4571NB *	1000	Φ330	Φ80 or Φ100	17.5	12	9.25	16	1.8	L
RX-4571SA	1000	Φ330	Φ80 or Φ100	17.5	12	9.25	16	3.65	L
RX-4574LC *	2000	Φ180	Φ60	13	4	7.25	12	1.45	L
RX-4581NB *	1000	Φ330	Φ80 or Φ100	17.5	12	9.25	16	1.8	L
RX-4803LC	2000	Φ180	Φ60	13	4	7.25	12	1.45	L
RX-4803SA	1000	Φ330	Φ80 or Φ100	17.5	12	9.25	16	3.65	L
RX6110SA	1000	Φ330	Φ80 or Φ100	17.5	12	9.25	16	3.65	L
RX8010SJ	1000	Φ330	Φ80	17.5	12	9.25	16	2.95	L
RX-8025NB *	1000	Φ330	Φ80 or Φ100	17.5	12	9.25	16	1.8	L
RX-8025SA	1000	Φ330	Φ80 or Φ100	17.5	12	9.25	16	3.65	L
RX-8035LC	2000	Φ180	Φ60	13	4	7.25	12	1.45	L
RX-8035SA	1000	Φ330	Φ80 or Φ100	17.5	12	9.25	16	3.65	L
RX****CE/ RA****CE	2000	Φ180	Φ60	9	4	5.25	8	1.4	L
RX8111CE	2000	Φ180	Φ60	9	4	5.25	8	1.4	L
RX4111CE	2000	Φ180	Φ60	9	4	5.25	8	1.4	L
RX-8564LC	2000	Φ180	Φ60	13	4	7.25	12	1.45	L
RX-8571LC	2000	Φ180	Φ60	13	4	7.25	12	1.45	L
RX-8571NB *	1000	Φ330	Φ80 or Φ100	17.5	12	9.25	16	1.8	L
RX-8571SA	1000	Φ330	Φ80 or Φ100	17.5	12	9.25	16	3.65	L
RX-8581JE *	1000	Φ330	Φ80 or Φ100	17.5	12	9.25	16	2	L
RX-8581NB *	1000	Φ330	Φ80 or Φ100	17.5	12	9.25	16	1.8	L
RX-8581SA *	1000	Φ330	Φ80 or Φ100	17.5	12	9.25	16	3.65	L
RX-8731LC	2000	Φ180	Φ60	13	4	7.25	12	1.45	L
RX-8803LC	2000	Φ180	Φ60	13	4	7.25	12	1.45	L
RX-8803SA	1000	Φ330	Φ80 or Φ100	17.5	12	9.25	16	3.65	L
RX8900SA	1000	Φ330	Φ80 or Φ100	17.5	12	9.25	16	3.65	L

●**SAW Filter**

FF-555 *	4000	Φ330	Φ80 or Φ100	13.5	8.0	7.25	12.0	2.0	R

●**Sensor**

XV-3510CB	2000	Φ254	Φ100	13.4	8	7.25	12	2.1	L
XV4001Bx	2000	Φ254	Φ100	13.4	8	7.25	12	2.1	L
XV4001Kx	1000	Φ254	Φ100	13.4	8	7.25	12	3.7	L
XV7021BB/ XV7081BB	2000	Φ254	Φ100	13.4	8	7.25	12	2.1	L
XV7011BB/ XV7001BB	2000	Φ254	Φ100	13.4	8	7.25	12	2.1	L
XV-8000CB *	2000	Φ254	Φ100	13.4	8	7.25	12	2.1	L
XV-8000LK *	1000	Φ254	Φ100	13.4	8	7.25	12	3.7	L
XV-9100CD/XV-9300CD	2000	Φ254	Φ100	13.4	8	7.25	12	1.8	L
XV-9100LP/XV-9300LP	500	Φ330	Φ80 or Φ100	25.4	12	13.25	24	8.5	R
XV-9100LV/XV-9300LV	1000	Φ330	Φ80 or Φ100	17.4	12	9.25	16	4.5	L

■Glossary

Item	Content	Object
Fundamental mode	First harmonic crystal vibration mode. The AT resonance frequency is determined by the thickness of the crystal, but even with the same thickness the third overtone will be about three times the frequency of the fundamental. With tuning fork crystal unit, the second overtone is about six times the fundamental. 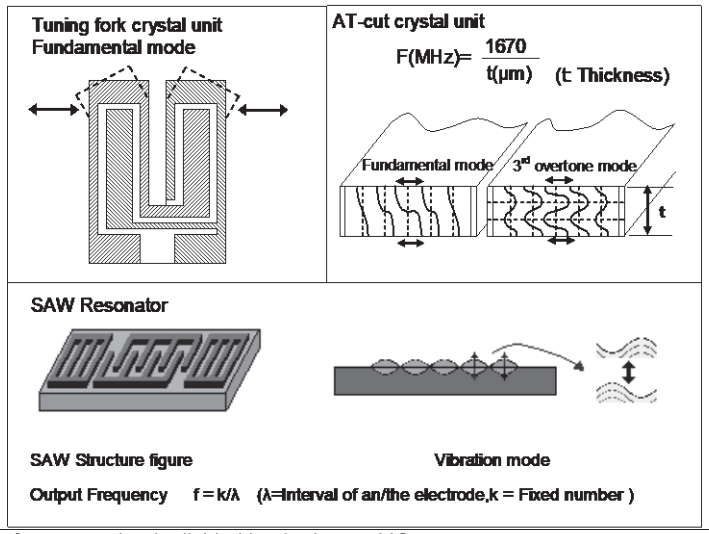 	X'tal ,OSC
Divided frequency	The output frequency that is divided by the internal IC.	OSC
Symmetry (tw/t) (SYM)	Ratio of full and half cycles. 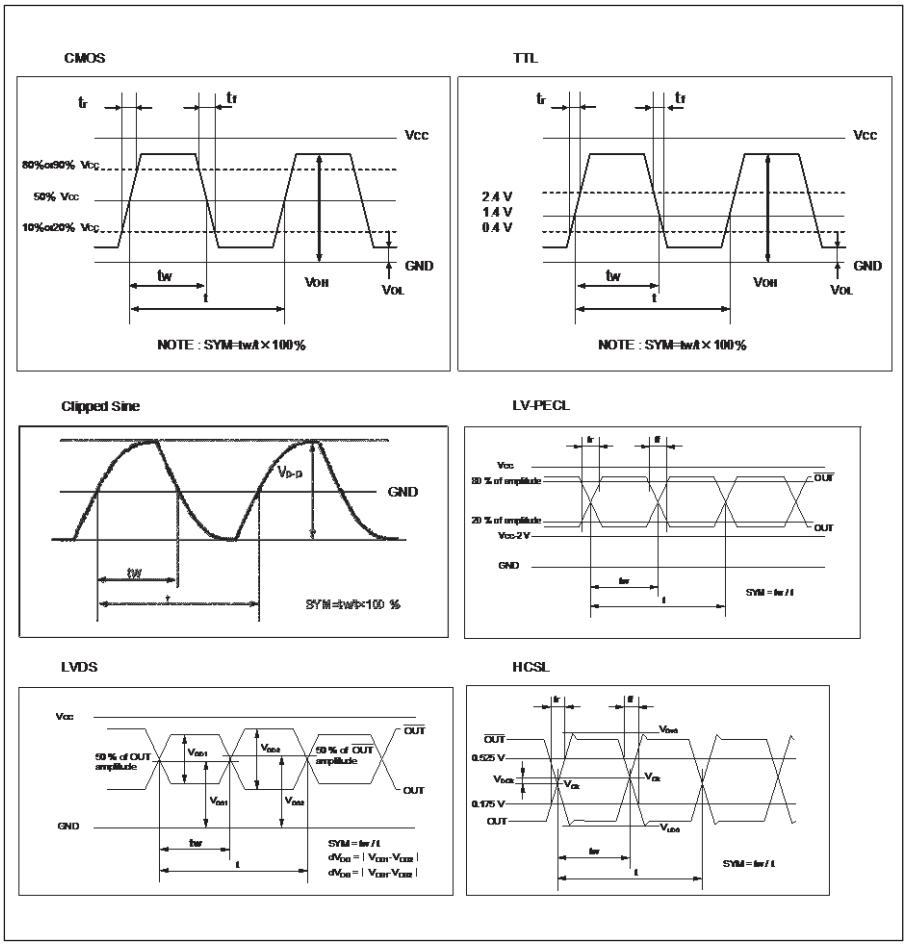 	OSC
(Equivalent)series capacitance (C_1) (motional capacitance)	Energy distortion to the (equivalent) internal charge capacitance component of the crystal unit, at the series resonant frequency.	X'tal
(Equivalent)series resonant resistance (R_1)	Vibration loss to the (equivalent) internal charge capacitance component of the crystal unit, at the series resonant frequency. A measure of the easiness of oscillation.	X'tal

X'tal:Crystal unit, OSC:Crystal oscillator More details are available on the website.

Item	Content	Object
Drive level (DL)	Current or voltage level in the oscillating (operating)state.(Drive power= power required to oscillate crystal unit.)	X'tal
Deviation in PB	The difference between the max. and min. attenuations within a pass band.	Filter
Frequency (f)	Number of waves (cycles)per second. The relation between frequency and cycle is f(Hz)=1/t(s).	ALL
(Frequency)aging (f_age, f_aging)	Amount of frequency drift when operated under the specified conditions for a specified term.	ALL
Frequency tolerance precision (f_tol)	Under specified conditions at an ambient temperature of +25 °C,the difference in actual (measured) frequency from the nominal frequency.	X'tal
Frequency voltage Coefficient	Taking the output frequency at the central voltage in the operating voltage range as the reference, the change in output frequency to voltage. Causes of this change are changes in crystal deformation, and changes in IC internal constants for chips mounted in the oscillator and Real time clock module. The effects of the ICs are larger.	OSC
Frequency tolerance (f_tol)	Within standard temperature and operational voltage ranges, the drift in the output frequency. The output frequency drift including frequency temperature characteristics and frequency voltage characteristics. When there is an annotation in the margin, It is given to priority.	OSC
HFF-XTAL	HFF-XTAL is a high frequency fundamental mode crystal unit using inverted-mesa shape AT-cut blank fabricated with photolithographic technology. Therefore it has an excellent stability for temperature, aging and shock.	OSC
Frequency temperature characteristics	Taking the frequency at 25 degrees Centigrade as the reference, the change in frequency in response to ambient temperature. ●Tuning fork crystal unit. SAW Resonator. $\Delta f/f = B(Ti-\theta X)^2$ θX:specified temperature ●AT crystal unit. $\Delta f/f = \alpha(\theta X-25) + \beta(\theta X-25)^2 + \chi(\theta X-25)^3$ Examples of frequency temperature characteristics 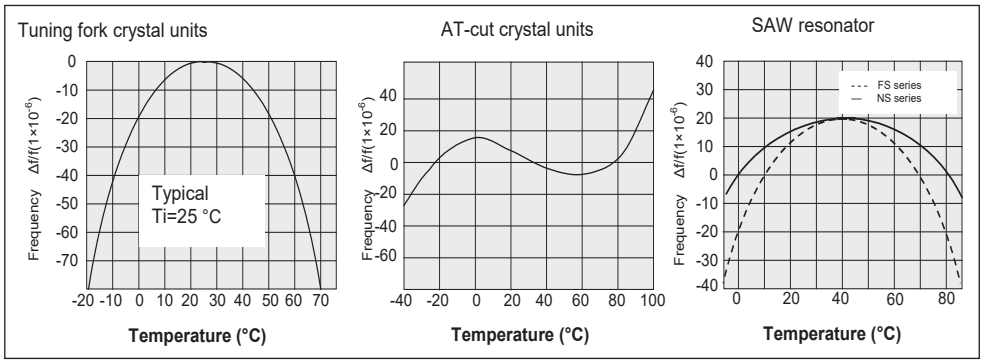 	ALL
Group delay distortion (Δt)	The difference between the max. and min. group delay within a pass band B1 unless otherwise specified.	Filter
Insulation resistance (IR)	Resistance between lead and lead, or between lead and case package.(conductive package)	ALL
Insertion loss (L)	The logarithmic ratio of the power delivered to the load impedance before insertion of the filter to the power delivered to the load impedance after insertion of the filter.	Filter
Load capacitance (C_L)	Effective capacitance (series equivalent charge capacitance) of the oscillation circuit as seen from the pins of the crystal unit. This capacitance is determined as a condition when the crystal unit is connected to the oscillation circuit and will determine the output frequency. Load capacitance approximation:C_L	X'tal
Max.drive level (GL)	Rating for the drive level. Current or power input over this level may result in characteristic degradation or destruction.	X'tal
Max. supply voltage (V_{CC}-GND)	Maximum rated value for power input to the power supply pin. Input over this value may result in characteristic degradation or destruction.	OSC
Max. input level (R)	The max. power that can be delivered to the filter without destructing the filter.	Filter
Nominal frequency (f_nom)	Nominal value of frequency of crystal unit. A frequency given in specification, to which other frequencies may be referred.	X'tal Filter
Operating temperature Range(T_use)	Temperature range where specification characteristics are fulfilled,unless otherwise specified.	ALL
Origin frequency (f_o)	Oscillation source frequency of oscillator inside oscillation system.	OSC

X'tal:Crystal unit, OSC:Crystal oscillator More details are available on the website.

Item	Content	Object
Fall time(t_f)	The time it takes for the output wave form to change from the high voltage(high level) to the low voltage(low level). Also called wave form fall time. See waveform diagram under Symmetry.	OSC
Rise time(t_r)	The time it takes for the output wave form to change from the low voltage (low level) to the high voltage (high level). Also called wave form fall time. See wave from diagram under Symmetry.	OSC
Oscillation circuit	Circuit needed to oscillate crystal unit. Circuit Constants will differ with type of crystal unit and frequency. **Basic oscillation circuit using CMOS IC** 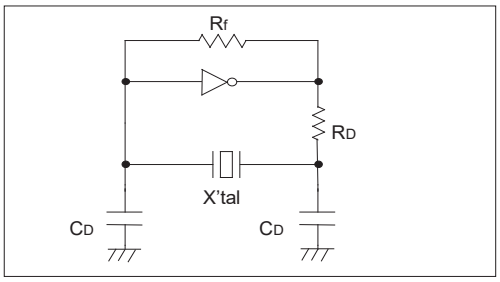 	X'tal
Start-up time (t_str)	The time from power on until the wave form stabilizes. However, voltage rise times depend on the power supply, Therefore, the time depends on the power supply, and the time is measured from a specific set of initial conditions.	OSC
Output enable(OE)	Output is switched to high impedance, and wired OR connection can be used to select multiple outputs(frequency). OE pin: High or open. Specified frequency output = enabled. OE pin: Low. Output is high impedance=disabled. Oscillation is not stopped, so after the clock is disabled, it is not synchronized with OE (clock is continuous). 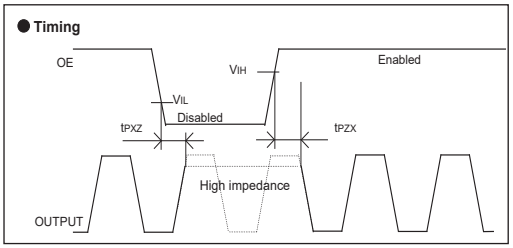 	OSC
Output frequency (f_o)	The frequency output from the oscillator circuit or the crystal oscillator system.	OSC
Output load conditions	The types and quantities (power) of the loads that can be connected to the oscillator. Calculated for 1 TTL as I_{OH} = -40 μA, I_{OL} = 1.6 mA and for LS-TTL as I_{OH} = -20 μA, I_{OL}, = 0.4 mA.	OSC
Overtone	Vibration state when crystal is vibrating as a high harmonic(see base wavelength). It is harder To match the overtone oscillation circuit with the crystal unit than the fundamental oscillation circuit.	X'tal,OSC
Pass band (BW)	Pass band (BW) A band of frequencies B1 in which the attenuation is equal to or less than a specified value A1 A band of frequencies B1 in which the attenuation is equal to or less than the insertion loss L. Stop band attenuation Bands of frequencies B2 and B3 in which the attenuations are equal to or greater than specified values A2 and A3 respectively. 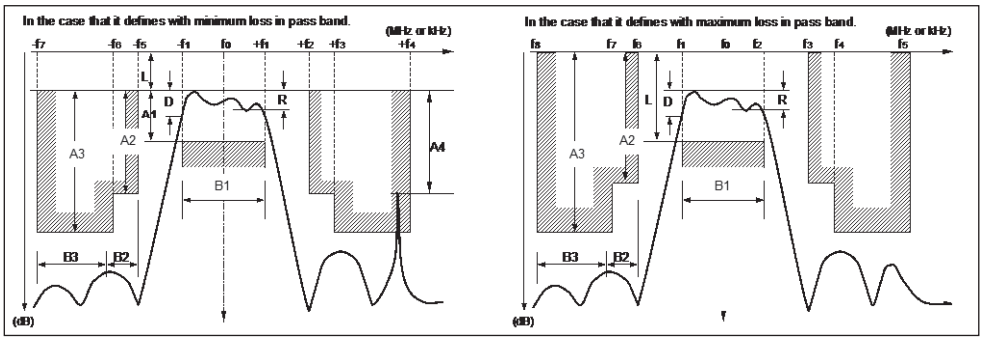 	Filter
Ripple (R)	The difference between the max. and min. peak attenuation within a pass band.	Filter
Recommended drive level (DL)	Excitation level for optimum oscillation characteristics.	X'tal
Shunt capacitance(Co)	Charge capacitance between the two electrodes in the crystal unit.	X'tal

X'tal:Crystal Unit, OSC:Crystal Oscillator More details are available on the website.

Item	Content	Object
Soldering conditions (T_{SOL})	Temperatures or times over these limits may result in characteristic degradation or destruction.	ALL
Stand-by ($\overline{ST}$)	Function that halts crystal unit oscillation and frequency Division. Cuts the current consumed by the oscillators circuit and the frequency division stage. $\overline{ST}$ pin-high or open: Specified frequency output. $\overline{ST}$ pin-low: Output is low level,oscillation stops. : Output is low level (weak pull-down), oscillation stops. : Output is high impedance, oscillation stops. Please refer to each data sheet. 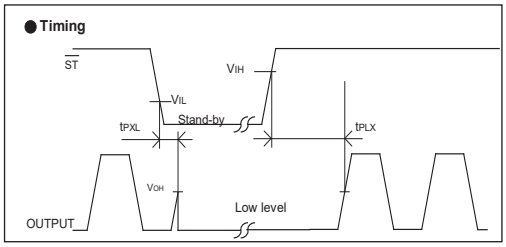 	OSC
Shortage temperature Range(T_stg)	Maximum absolute rating for the discharged state (no input of voltage, current or power). Exposure to temperatures over this level may result in characteristic degradation or destruction. To assure precision, store at room temperature whenever possible.	ALL
Spurious response A4 (dB)	Min. attenuation caused by extraordinary response in the stop band. Spurious response usually appears at a higher frequency than the center frequency.	Filter
Supply voltage (V_{CC})	Voltage input to Vcc pin which will support continuous operation with specification characteristics.	OSC
Terminating impedance (Zt)	Either of the impedances presented to the filter by the source or by the load. (Rt: Resistive portion, Ct: Parallel capacitive portion including stray capacitance)	Filter
VSWR	Voltage Standing Wave Ratio	Filter

X'tal:Crystal Unit, OSC:Crystal Oscillator More details are available on the website.

■Manufacturing Plant

Plant	Date Operations Commenced	Products
Ina Plant / Seiko Epson Corp.	Jun.1959	Crystal unit, Crystal oscillator, Real time clock module, Surface acoustic wave device, Sensing device
Miyazaki Epson Co.,	Jun.1984	Crystal Chip, Synthetic quartz
Epson Atmix Co.,	Oct.1999	Synthetic quartz

Plant	Date Operations Commenced	Products
⑧: Epson Precision Malaysia Sdn. Bhd.	Dec.1974	Crystal unit, Crystal oscillator, Sensing device, Real time clock module
⑨: Epson Precision (Thailand) Ltd.	May.1988	Crystal unit, Surface acoustic wave device Crystal oscillator
⑩: Epson Precision Suzhou Co.,Ltd.	Mar.1997	Crystal unit, Crystal oscillator Real time clock module
⑪: Epson Portland ,Inc.	Jun.2000	Synthetic quartz

■Business area

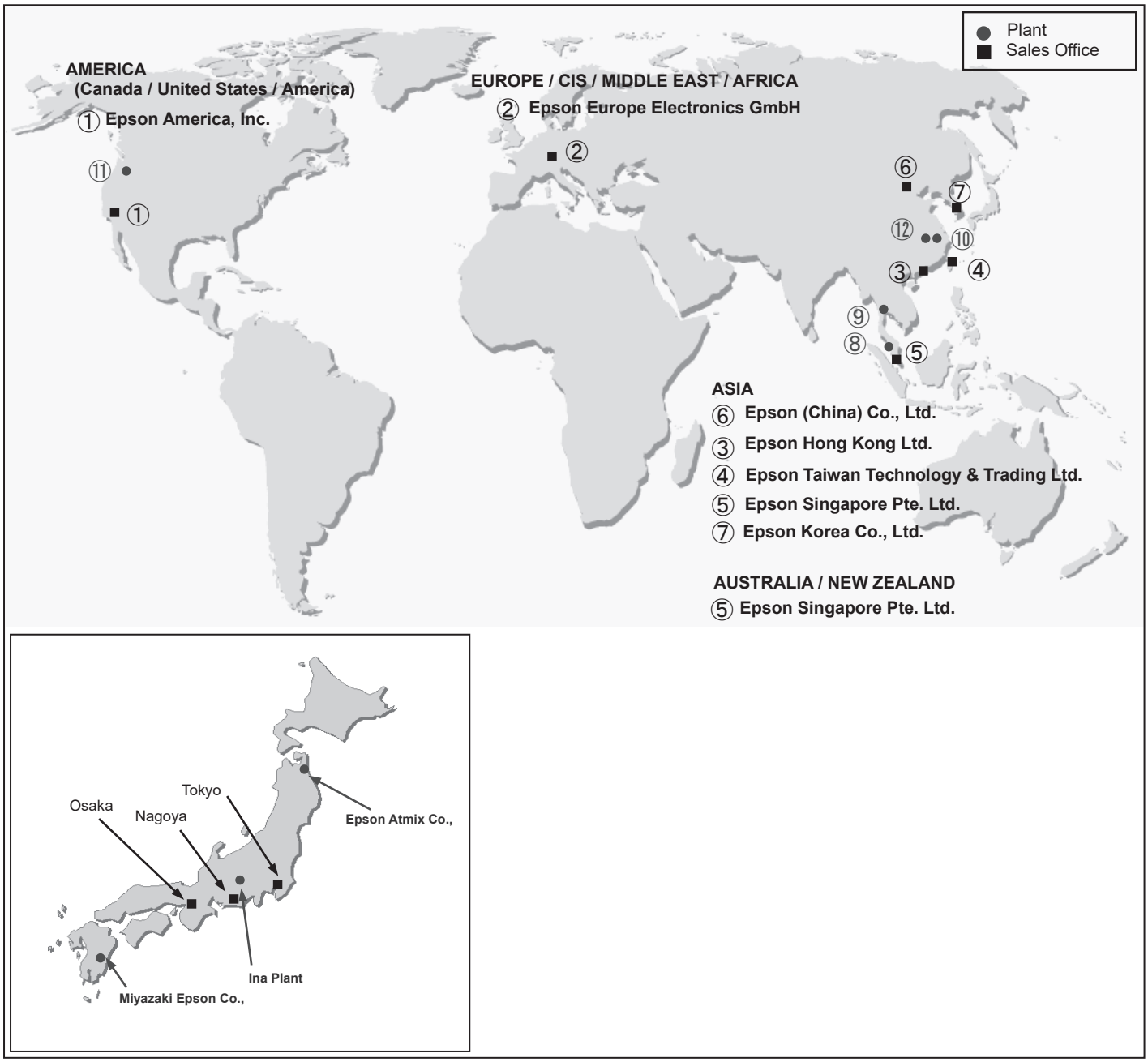

AMERICA

Epson America, Inc.

Headquarter	3131 Katella Ave. Los Alamitos, CA 90720, USA Phone: (1)-562-290-4677 www.epson.com/microdevices
San Jose Office	2860 Zanker Road Suite 204 San Jose, CA 95134, USA Phone: Toll Free (1)- 800-463-7766

EUROPE

Epson Europe Electronics GmbH

Headquarter	Riesstrasse 15, 80992 Munich, Germany Phone: (49)-89-14005-0 Fax: (49)-89-14005-110 www.epson-electronics.de

ASIA

Epson (China) Co., Ltd.

Headquarter	4F, Tower 1 of China Central Place, 81 Jianguo Street, Chaoyang District, Beijing 100025 China Phone: (86) 10-8522-1199 Fax: (86) 10-8522-1125 www.epson.com.cn
Shanghai Branch	High-Tech Building,900 Yishan Road Shanghai 200233,China Phone: (86) 21-5423-5577 Fax: (86) 21-5423-4677
Shenzhen Branch	Room 804-805 8F, Tower 2, Ali Center, No.3332 Keyuan South Road, Shenzhen Bay, Nanshan District, Shenzhen, China 518054 Phone: (86) 755-3299-0588 Fax: (86) 755-3299-0560

Epson Hong Kong Ltd.
Unit 715-723 7/F Trade Square, 681 Cheung Sha Wan Road, Kowloon, Hong Kong
Phone: (86) 755-3299-0588 Fax: (86) 755-3299-0560 (Shenzhen Branch)
www.epson.com.hk

Epson Taiwan Technology & Trading Ltd.
15F., No.100, Songren Rd., Sinyi Dist.,
Taipei City, 11073 TAIWAN
Phone: (886) 2-8786-6688
www.epson.com.tw

Epson Singapore Pte. Ltd.
Electronic Devices Sales Division Alexandra Technopark Block B, #04-01/04 438B Alexandra Rd, Singapore 119968
Phone: (65) 6586-5500 Fax: (65) 6271-3182
www.epson.com.sg

Epson Korea Co., Ltd
10F Posco Tower Yeoksam, Teheranro 134 Gangnam-gu, Seoul, 06235, Korea
Phone: (82) 2-3420-6695
www.epson.co.kr

Distributor

CRYSTAL MASTER 2022
Issued on Mar. 2022
Seiko Epson Corporation
Device Sales Department

EPSON

EXCEED YOUR VISION

www5.epsondevice.com/en/

Document code : 711240602

VEGETABLE OIL INK